ONONDAGA COUNTY
DEPARTMENT OF DRAINAGE AND SANITATION

GARAGE MODIFICATIONS AT:

Meadowbrook-Limestone Wastewater Treatment Plant

Town of Manlius — Manlius , New York

PROJECT NO. 587353
BID REFERENCE NO. 4576

CONTRACT 4A - GENERAL
CONTRACT 4B - ELECTRICAL
CONTRACT 4C - HEATING AND VENTILATING
CONTRACT 4D - PLUMBING

FILE COPY
DO NOT REMOVE
FROM OFFICE

ARCHITECTS

FULIGNI • FRAGOLA / ARCHITECTS pllc
6320 FLY ROAD
EAST SYRACUSE, NEW YORK 13057
(315) 437-2636
FAX NO. (315) 463-8038

#8

STRUCTURAL CONSULTANT

Klepper, Hahn & Hyatt
STRUCTURAL ENGINEERS & LANDSCAPE ARCHITECTS, P.C.
SYRACUSE NEW YORK
5795 WIDEWATERS PARKWAY
SYRACUSE, NEW YORK 13214
(315) 446-9201
FAX NO. (315) 446-9205

ENGINEERING CONSULTANT

e-t engineering, pllc
625 EAST WILLOW STREET
SYRACUSE, NEW YORK 13203
(315) 422-1179

SYMBOLS

- DETAIL/SECTION/ELEVATION INDICATION
- PLAN ENLARGMENT
- DETAIL NUMBER BY X-Y COORDINATE
- DETAIL SHEET LOCATION
- ROOM NUMBER
- DOOR NUMBER
- WORK NOTE
- CENTERLINE
- PILE SYMBOL

MATERIALS LEGEND

- BATT INSULATION
- BRICK (SECTION)
- C.M.U.
- CONCRETE
- EARTH
- G.W.B., GROUT OR MORTAR
- PLYWOOD
- RIGID INSULATION
- STEEL (SECTION)
- WOOD FRAMING (CONTINUOUS)
- WOOD BLOCKING (NON-CONTINUOUS)
- FINISH WOOD

DRAWING INDEX

T1.1 TITLE SHEET

STRUCTURAL
S1 NEW SLAB FOR GARAGE BUILDING

ARCHITECTURAL
A1.1 FLOOR PLANS, ELEVATIONS AND BUILDING SECTION
A2.1 DOOR AND ROOM FINISH SCHEDULES AND DETAILS
A3.1 SITE PLAN, FLOOR PLAN AND ELEVATIONS - POLE BARN

PLUMBING
P-1 EXISTING FLOOR PLAN
P-2 FLOOR PLAN
P-3 SCHEDULES, LEGENDS, DETAILS AND DIAGRAMS

HEATING
H-1 EXISTING FLOOR PLAN
H-2 FLOOR PLAN
H-3 SCHEDULES, LEGEND AND DETAILS

MECHANICAL
ME-1 EQUIPMENT WIRING SCHEDULE

ELECTRICAL
E-1 EXISTING FLOOR PLAN
E-2 PROPOSED FLOOR PLAN (LIGHTING/POWER)
E-3 PROPOSED POLE BARN FLOOR PLAN (LIGHTING/POWER) / DETAILS

LOCATION MAP

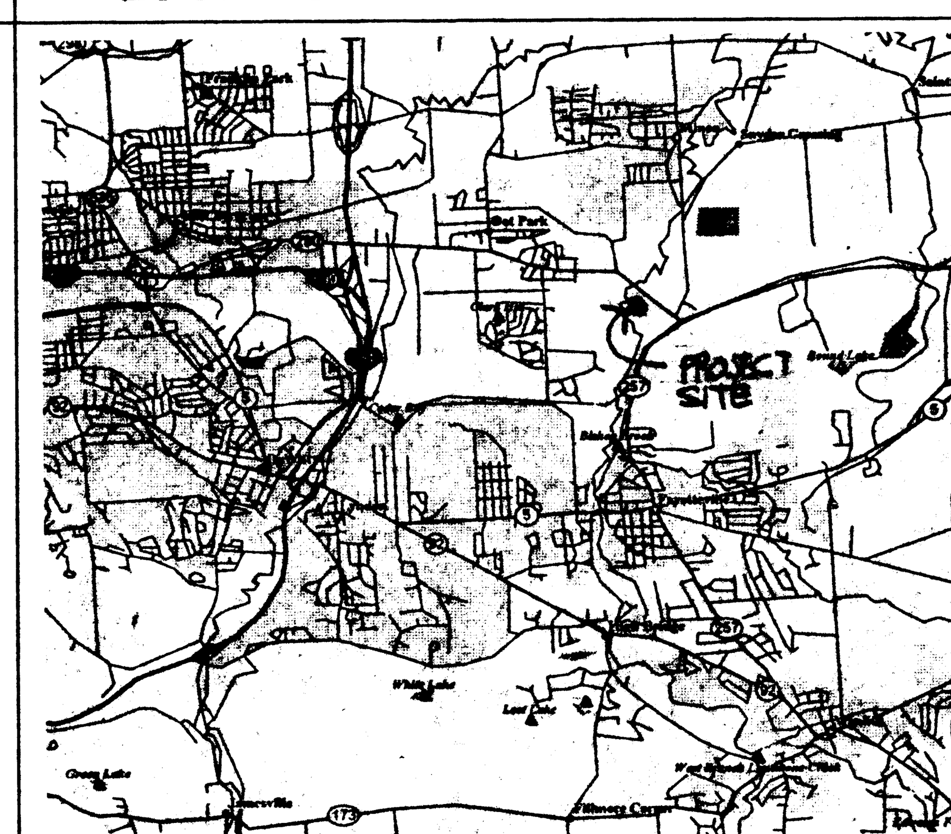

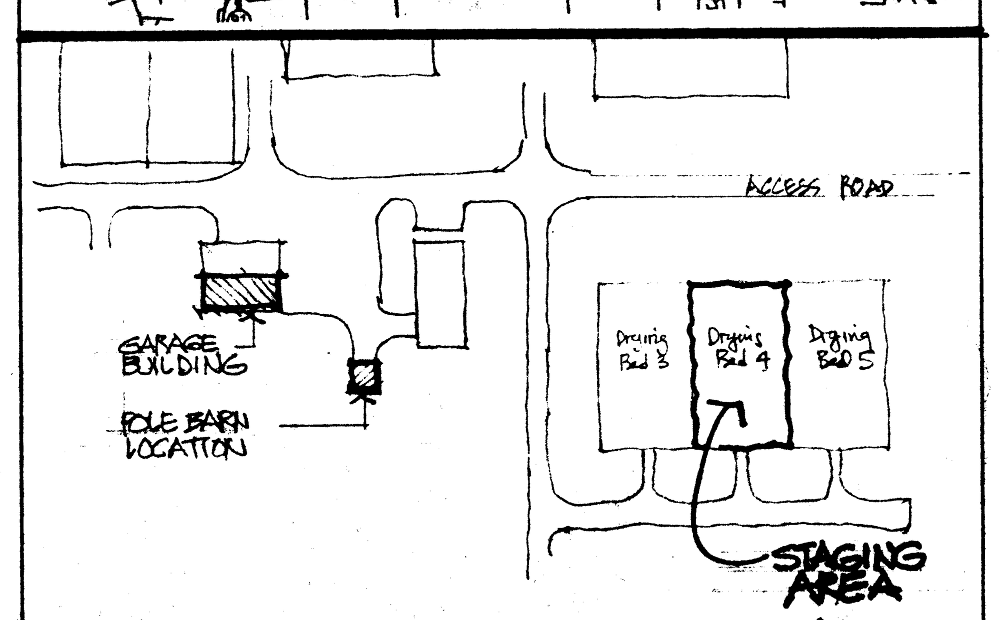

STAGING AREA

ABBREVIATIONS

A.F.F.	ABOVE FINISH FLOOR
A.F.	ABOVE FLOOR
A.P.	ACCESS PANEL
A.C.T.	ACOUSTICAL TILE
A.C.P.	ACOUSTICAL CEILING PANEL
ADJ.	ADJUSTABLE/ADJACENT
ALT.	ALTERNATE
ALUM.	ALUMINUM
ANCH.	ANCHOR
A.B.	ANCHOR BOLT
A.D.	AREA DRAIN
B.	BASE.
BM.	BEAM
B.N.	BULL NOSE
BIT.	BITUMINOUS
BLK/BLK'G.	BLOCK(ING)
BOT.	BOTTOM
B.O.	BOTTOM OF/ BY OTHERS
B.C.	BOTTOM CHORD
BRK.	BRICK
BLDG.	BUILDING
B.U.	BUILT UP
℄ /C.L.	CENTERLINE
CAB.	CABINET
C.U.H.	CABINET UNIT HEATER
CRPT.	CARPET
C.I.P.	CAST-IN-PLACE OR CAST IRON PIPE
C.B.	CATCH BASIN
CLG.	CEILING
CEM. PLAS.	CEMENT PLASTER
CNTR/CTR.	CENTER
C-C	CENTER TO CENTER
C.M.T.	CERAMIC MOSAIC TILE
C.T.	CERAMIC TILE
C.O.	CLEAN OUT
CLR.	CLEAR
CL./CLOS.	CLOSET
COL.	COLUMN
CONC.	CONCRETE
C.M.U.	CONCRETE MASONRY UNIT
CONT.	CONTINUOUS
C.J.	CONTROL JOINT
CORR.	CORRIDOR
C./CRS.	COURSE(S)
D.P.C.O.	DECK PLATE CLEAN OUT
DET.	DETAIL
DIA./Ø	DIAMETER
DIM.	DIMENSION
DR.	DOOR
DN.	DOWN
DWG.	DRAWING
D.F.	DRINKING FOUNTAIN
EA.	EACH
E.F.	EACH FACE
E.W.	EACH WAY
ELEC.	ELECTRIC
ELEV.	ELEVATION
E.C.	ELECTRICAL CONTRACTOR
ENGR.	ENGINEER
EQUIP.	EQUIPMENT
EXH.	EXHAUST
EXPAN.	EXPANSION
E.J.	EXPANSION JOINT
EXP.	EXPOSED
EX/EXIST.	EXISTING
EXT.	EXTERIOR
F.O.	FACE OF
F-F	FACE TO FACE
FT.	FEET
FIN.	FINISH
F.D.	FLOOR DRAIN
F.E.	FIRE EXTINGUISHER
F.R.	FIRE RATED
FL.	FLOOR
FTG.	FOOTING
F.S.	FOOTING STEP
FND./FOUND.	FOUNDATION
FURR.	FURRING/FURRED
F.R.	FIRE RATED
GALV.	GALVANIZED
GA.	GAUGE
G.C.	GENERAL CONSTRUCTION CONTRACTOR
GL.	GLASS
G.M.U.	GLASS MASONRY UNIT
G.C.T.	GLAZED CERAMIC TILE
G.W.F.	GLAZED WALL FINISH
GR.	GRADE
GND.	GROUND
GYP.	GYPSUM
G.W.B.	GYPSUM WALL BOARD
G.D.W.	GYPSUM DRY-WALL
HD.BD.	HARD BOARD
HDWR.	HARDWARE
HDWD.	HARDWOOD
HTR.	HEATER
H&V	HEATING AND VENTILATING
HVAC	HEATING/VENTILATION & AIR CONDITIONING
H.C.	HEATING CONTRACTOR
HGT.	HEIGHT
H.P.D.L.	HIGH PRESSURE DECORATIVE LAMINATE
H.M.	HOLLOW METAL
HORZ.	HORIZONTAL
HP.	HORSEPOWER
HB.	HOSE BIB
IN.	INCHES
I.D.	INSIDE DIAMETER
I.F.	INSIDE FACE
INSUL.	INSULATION
INT.	INTERIOR
INV.	INVERT
I.P.	IRON PIPE
JAN.	JANITOR
JT.	JOINT
JST.	JOIST
LAM.	LAMINATE
LAV.	LAVATORY
LT.	LIGHT
L.P.	LIGHT PANEL
LOC.	LOCATION
L.L.V.	LONG LEG VERTICAL
L.L.H.	LONG LEG HORIZONTAL
L.W.	LONG WAY
L.G.F.	LIGHT GAGE FRAMING
LTWT.	LIGHTWEIGHT
MH.	MANHOLE
MFR.	MANUFACTURER
MAS.	MASONRY
MAT./MATER.	MATERIAL
MAX.	MAXIMUM
MECH.	MECHANICAL
MET./MTL.	METAL
MIN.	MINIMUM
MISC.	MISCELLANEOUS
M.O.	MASONRY OPENING
MOS.	MOSAIC
M.H.	MOUNTING HEIGHT
N.I.C.	NOT IN CONTRACT
O.C.	ON CENTER
OPNG.	OPENING
OPP.	OPPOSITE
O.D.	OUTSIDE DIAMETER
O.F.	OUTSIDE FACE
O. TO O. or O/O	OUT TO OUT
OHD.	OVERHEAD
PT.	PAINT
PR.	PAIR
PRTN./PART.	PARTITION
PVMT.	PAVEMENT
PLAS.	PLASTER/PLASTIC
PL.	PLATE
PLUMB.	PLUMBING
P & M	PATCH AND MATCH
P.C.	PLUMBING CONTRACTOR
PLWD	PLYWOOD
PVC.	POLYVINYL CHLORIDE
PREF.	PREFINISHED
P.E.J.M.	PREMOLDED EXPANSION JOINT MATERIAL
P.R.V.	POWER ROOF VENTILATOR
P.V.	PLUMBING VENT
Q.T.	QUARRY TILE
RAD.	RADIATION OR RADIUS
R.	RISER
REF.	REFERENCE/REFRIGERATOR
REG.	REGISTER
REINF.	REINFORC(ING)
REINS.	REINSTALL
REL.	RELOCATE
REQ'D./REQ.	REQUIRED
RFG.	ROOFING
R.D.	ROOF DRAIN
R.L.	ROOF LEADER
R.V.	ROOF VENT
RM.	ROOM
R.O.	ROUGH OPENING
RUB.	RUBBER
R.O.B.	RUN OF BANK
R.T.U.	ROOF TOP UNIT
R.B.	RUBBER BASE
R.T.	RUBBER TILE
SAN.	SANITARY
SCHED.	SCHEDULE
S.D.	SCUPPER DRAIN
SECT.	SECTION
SHT.	SHEET
SHWR./SHR.	SHOWER
SIM.	SIMILAR
SL.	SLOPED
SPA.	SPACE(S)
SPEC.	SPECIFICATION
SP.	SPRINKLER
SQ.	SQUARE
SQ.FT.	SQUARE FOOT
SQ.IN.	SQUARE INCH
S.	STAIN
S.S.	STAINLESS STEEL
STD.	STANDARD
S.R.V.	STATIONARY ROOF VENT
STL.	STEEL
S.J.	STEEL JOIST
STOR./STO.	STORAGE
ST.	STORM
STRUCT.	STRUCTURAL
SUSP.	SUSPENDED
SYM.	SYMMETRICAL
TEL.	TELEPHONE
TEMP.	TEMPERATURE
TEMP.	TEMPERED
T.P.	TEMPERED PLATE
TERR.	TERRAZZO
TLT./T.	TOILET
T & G	TONGUE AND GROOVE
T & B	TOP AND BOTTOM
T.C.	TOP CHORD
T.M.H.	TOP MOUNTING HEIGHT
T.O.B.	TOP OF BLOCK
T.O.C.	TOP OF CONCRETE
T.O.F.	TOP OF FOOTING
T.O.M.	TOP OF MASONRY
T.O.S.	TOP OF STEEL
T.	TREAD
T.W.E.	TOP WALL ELEVATION
TYP.	TYPICAL
TRT'D./TRTD.	TREATED
U.D.	UNIT DIMENSION
U.V.	UNIT VENTILATOR
U.O.N.	UNLESS OTHERWISE NOTED
UR.	URINAL
VERT.	VERTICAL
VEST.	VESTIBULE
V.B.	VINYL BASE
V.C.T.	VINYL COMPOSITION TILE
V.W.F.	VINYL WALL FABRIC
V.I.F.	VERIFY IN FIELD
WAINS.	WAINSCOT
W.C.	WATER CLOSET
W/D	WASHER/DRYER
W.D.	WALL DIFFUSER
W.P.C.O.	WALL PLATE CLEAN OUT
W.B.	WALL BUMPER
WPC	WALL PROTECTIVE COVERING
WP.	WATERPROOF
W.S.	WEATHER STRIP
WR GWB	WATER RESISTANT GYPSUM WALLBOARD
W.	WEATHERPROOF
WT.	WEIGHT
W.W.M.	WELDED WIRE MESH
W.O.	WINDOW OPENING
W/	WITH
W/o	WITHOUT
WD.	WOOD

REVISIONS
no.	date	description	by

It is a violation of the New York State education law for any person, unless acting under the direction of a licensed, registered architect, to alter an item on this document in any way. (title VIII, part 69, 5(b))

REGISTERED ARCHITECT — STATE OF NEW YORK

GARAGE MOFICATIONS AT:
MEADOWBROOK-LIMESTONE WASTEWATER TREATMENT PLANT
TOWN OF MANLIUS — MANLIUS, NEW YORK
FULIGNI • FRAGOLA / ARCHITECTS plc

sheet title
TITLE SHEET

drawn TEF
checked JM
date 4/3/2000
file no. 99001.73
sheet no. T1.1

\SDSKPROJ\99001\DWG\CONDOC\T1-1.DWG PLOT DATE: 04/11/2000

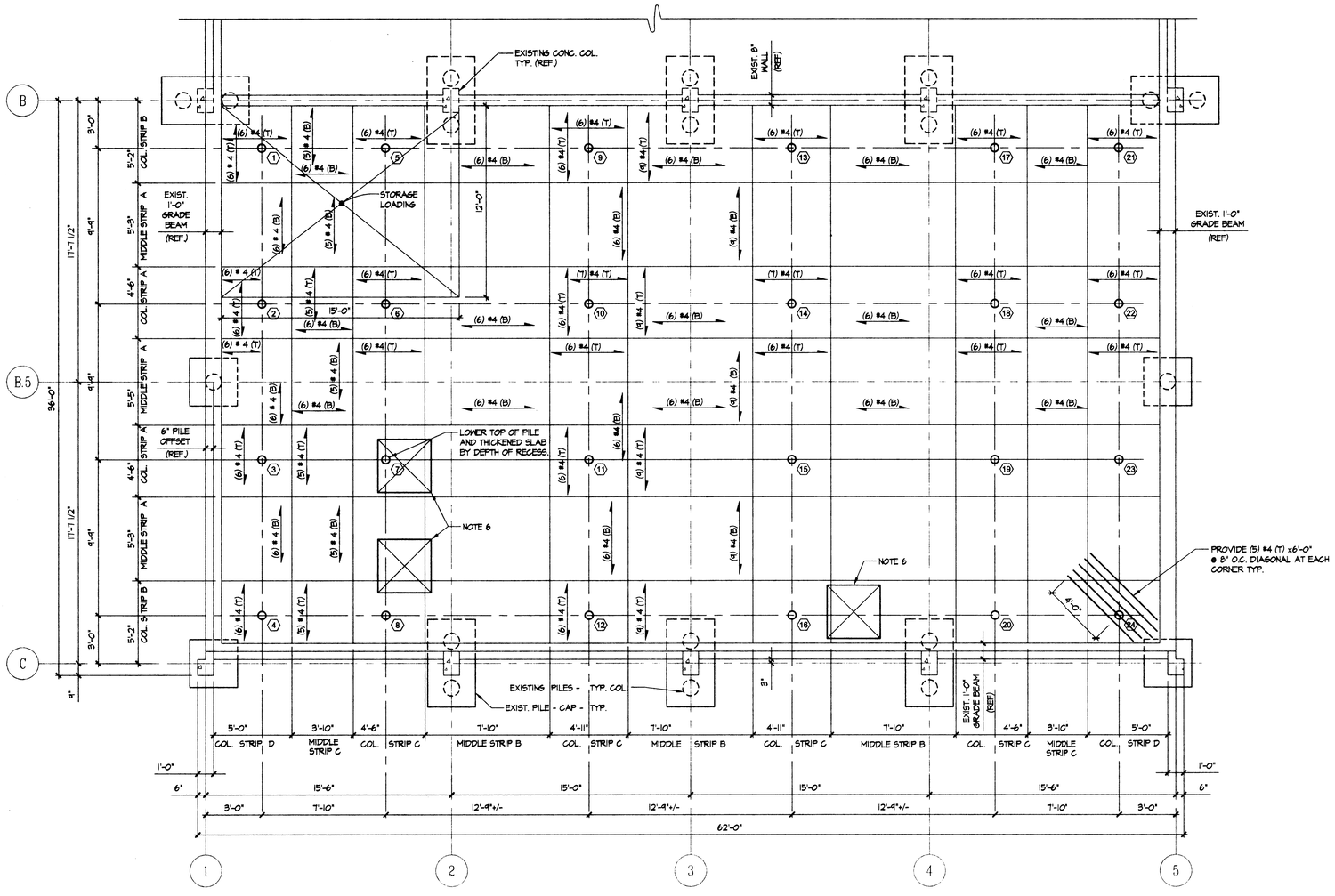

NOTES:

1. PROVIDE A 6" THICK REINFORCED SLAB. THICKEN SLAB AT PILE LOCATIONS. SEE TYPICAL SECTION THRU SLAB.
2. TOP OF SLAB ELEVATION TO MATCH EXISTING SLAB.
3. REFER TO ARCHITECTURAL DRAWINGS FOR LOCATION AND SIZE OF SLAB DEPRESSIONS.
4. SEE ARCHITECTURAL AND MECHANICAL DRAWINGS FOR OPENINGS NOT SHOWN ON STRUCTURAL DRAWINGS. PROVIDE ADDITIONAL REINFORCING IN SLAB AROUND ALL OPENINGS OR GROUPS OF OPENINGS GREATER THAN 1'-0" IN ANY DIRECTION. REINFORCING EACH SIDE OF OPENING (5) IN EACH DIRECTION, TO MATCH 1.5 TIMES AMOUNT OF REINFORCING CUT.
5. (REF.) = INFORMATION TAKEN FROM REFERENCE DRAWINGS FOR EXISTING CONSTRUCTION PROVIDED BY OWNER.
6. RECESS TOP OF SLAB FOR SHOWER, APPROX. 40" SQUARE x 3" DEEP. (VERIFY DIMENSIONS WITH EQUIPMENT.) THICKEN SLAB AND LOWER REINFORCING FOR 4'-0" ON SIDES OF RECESS.

A / S1 SLAB PLAN
SCALE: 1/4" = 1'-0"

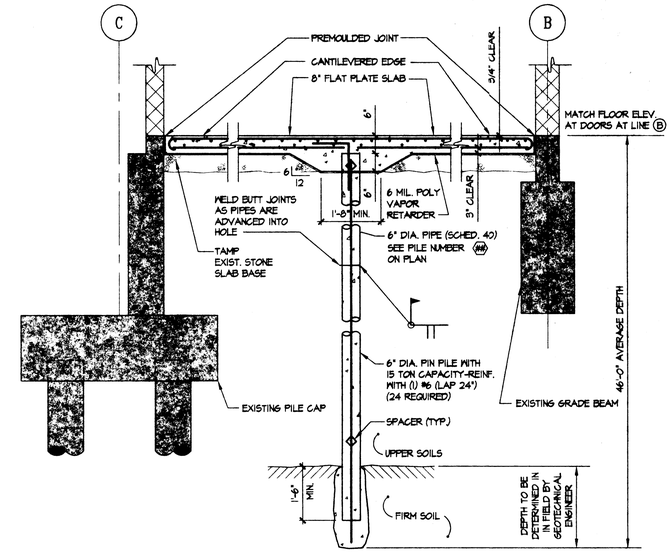

TYP. SECTION THRU SLAB
SCALE: 1/2" = 1'-0"

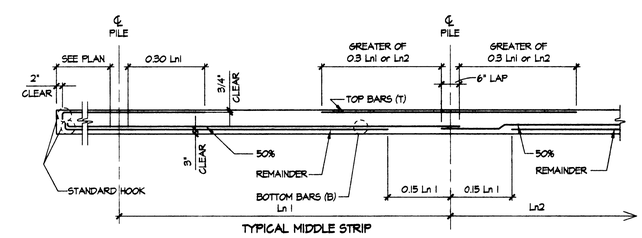

TYPICAL MIDDLE STRIP

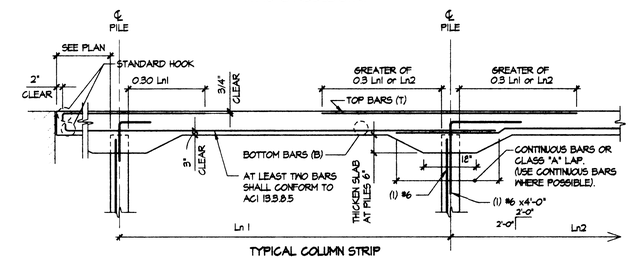

TYPICAL COLUMN STRIP

TYP. FLAT PLATE SLAB
SCALE: 1/2" = 1'-0"

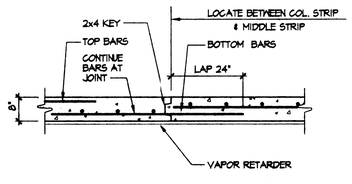

TYP. SLAB CONSTRUCTION JOINT DETAIL

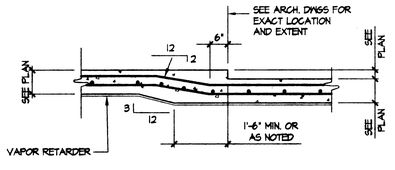

TYP. SLAB DEPRESSION DETAIL
REINFORCING NOT SHOWN

INTERIOR LINTEL SCHEDULE
FOR NON - BEARING MASONRY PARTITIONS

WALL THICKNESS	MASONRY OPENING	
	UP TO 4'-0" 4" BEARING EACH END	4'-0" TO 8'-0" 6" BEARING EACH END
4"	L 4x3½x⅜ LLV	L 6x3½x⅜ LLV
6"	MT 4x9	MT 7x11
8"	(2) - L'S 4x3½x⅜ LLV OR MT 4x12	(2) - L'S 6x3½x⅜ LLV OR MT 7x15

INTERIOR LINTEL NOTES

1. LINTELS NOT SHOWN ON STRUCTURAL PLANS.
2. SEE ARCHITECTURAL & MECHANICAL DRAWINGS FOR LOCATION.
3. FOR SPECIAL CONDITIONS SEE ARCHITECTURAL SCHEDULES OR SECTIONS.
4. FOR OPENINGS OVER 8'-0 CONSULT STRUCTURAL ENGINEER.
5. TACK WELD BACK-TO-BACK VERTICAL LEGS OF MULTIPLE ANGLE LINTELS.

LIST OF ABBREVIATIONS

(##)	PILE NUMBER
@	AT
ADD'L	ADDITIONAL
APPROX	APPROXIMATELY
ARCH.	ARCHITECTURAL
B.O.	BOTTOM OF
BRG.	BEARING
℄	CENTERLINE
C.J.	CONTROL JOINT
CMU	CONCRETE MASONRY UNIT
COL.	COLUMN
CONT.	CONTINUOUS
CONC.	CONCRETE
DIA. OR Ø	DIAMETER
DWG	DRAWING
EA.	EACH
ELEV.	ELEVATION
EMBED.	BAR EMBEDMENT
EXIST.	EXISTING
EXP.	EXPANSION
EXT.	EXTERIOR
F.F.	FINISH FLOOR
FNDN.	FOUNDATION
HORIZ. OR (H)	HORIZONTAL
L	ANGLE
LLH	LONG LEG HORIZONTAL
LLV	LONG LEG VERTICAL
MAX.	MAXIMUM
MIN.	MINIMUM
MECH.	MECHANICAL
M.O.	MASONRY OPENING
O.C.	ON CENTER
PL OR ℙ	PLATE
PROJ.	PROJECTION
PSI	POUNDS PER SQUARE INCH
REINF.	REINFORCED OR REINFORCING
REQ'D	REQUIRED
SCHED.	SCHEDULE
SECT.	SECTION
SIM.	SIMILAR
SQ.	SQUARE
STD.	STANDARD
T.O.	TOP OF
T.O.WALL	TOP OF WALL ELEVATION
T.O.SLAB	TOP OF SLAB ELEVATION
TYP.	TYPICAL
U.N.O.	UNLESS NOTED OTHERWISE
VERT. OR (V)	VERTICAL
V.I.F.	VERIFY IN FIELD
W.P.	WORKING POINT
W/	WITH

GENERAL NOTES

1. READ THE SPECIFICATIONS.
2. DESIGN LOADS:
   A. FLOOR LIVE - 100 PSF
   - 120 PSF AT STORAGE
3. CONSTRUCTION CONTRACTOR TO VERIFY EXISTING CONDITIONS AND DIMENSIONS IN FIELD BEFORE ORDERING MATERIALS. NOTIFY ARCHITECT IMMEDIATELY IF EXISTING CONDITIONS DIFFER FROM THE INTENT OF THESE DRAWINGS.
4. PIN PILES: AUGER CAST, REINFORCED CONCRETE PILES IN PILE SLEEVES.
5. CONCRETE:
   A. DESIGN STRENGTH - 4000 PSI @ 28 DAYS
   B. DESIGN STANDARD - ACI 318
   C. DETAIL STANDARD - CRSI - MANUAL OF STANDARD PRACTICE.
6. CONCRETE REINFORCING:
   A. DEFORMED BARS - ASTM A615, GRADE 60
7. CONCRETE COVER OVER BARS: (ALSO SEE ACI 318)
   A. FLOOR SLABS - ¾" CLEAR FROM TOP
   - 3" CLEAR FROM BOTTOM
8. PROVIDE ALL NECESSARY TIE BARS, SPACER BARS, CHAIRS, ETC.
9. SECTIONS AND DETAILS ARE CONTINUOUS AND TYPICAL UNLESS NOTED OTHERWISE.

REVISIONS

no.	date	description	by

It is a violation of the New York State education law for any person, unless acting under the direction of a licensed, registered architect, to alter an item on this document in any way.
title VIII, part 69, 5(b)

Klepper, Hahn & Hyatt
ENGINEERS AND LANDSCAPE ARCHITECTS, P.C.
SYRACUSE, NEW YORK

COPYRIGHT 1999 BY KLEPPER, HAHN & HYATT ENGINEERS AND LANDSCAPE ARCHITECTS, P.C. ALL RIGHTS RESERVED
NO PART OF THIS DOCUMENT MAY BE REPRODUCED OR USED IN ANY FORM OR BY ANY MEANS WITHOUT THE WRITTEN PERMISSION OF KLEPPER, HAHN & HYATT.

GARAGE MODIFICATIONS AT:
MEADOWBROOK-LIMESTONE
WASTEWATER TREATMENT PLANT
MANLIUS, NEW YORK
TOWN OF MANLIUS

JFD/LEWIS • JFD-S-GOVLA / ARCHITECTURE PC

sheet title
NEW SLAB FOR GARAGE BUILDING

drawn TSH
checked DMS
date 4/3/2000
kkh file no. 99083
sheet no. S1

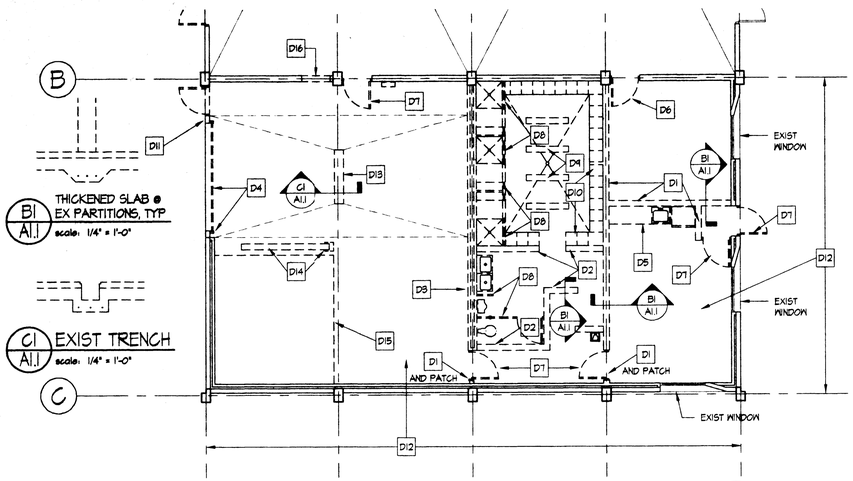

D1 A1.1 DEMOLITION PLAN
scale: 1/8" = 1'-0"

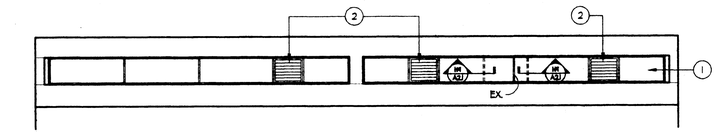

B7 A1.1 PARTIAL NORTH ELEVATION
scale: 1/8" = 1'-0"

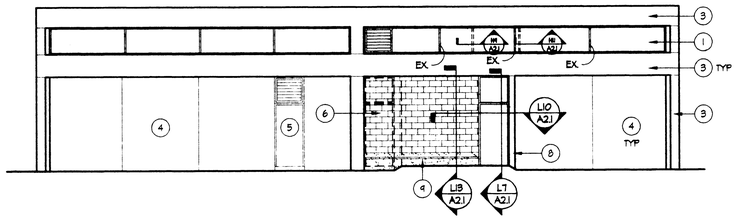

E7 A1.1 NORTH ELEVATION
scale: 1/8" = 1'-0"

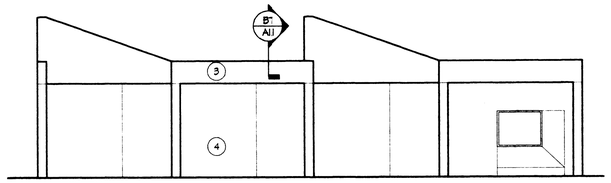

G7 A1.1 WEST ELEVATION
scale: 1/8" = 1'-0"

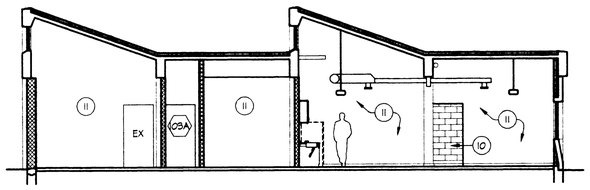

J7 A1.1 BUILDING SECTION
scale: 1/8" = 1'-0"

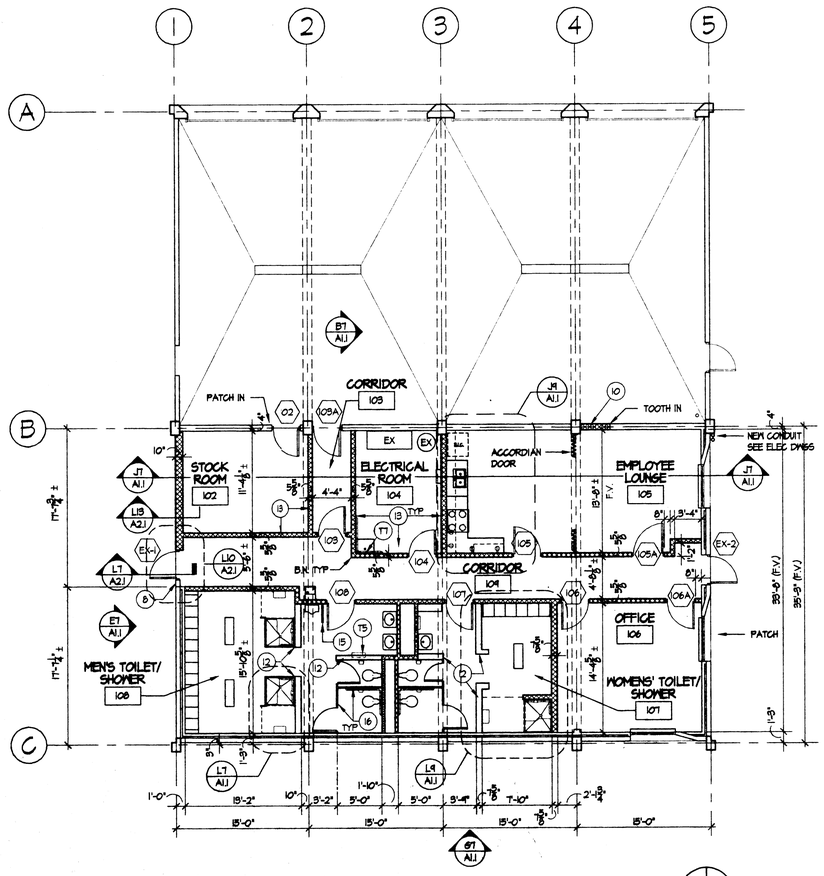

L1 A1.1 FLOOR PLAN
scale: 1/8" = 1'-0"

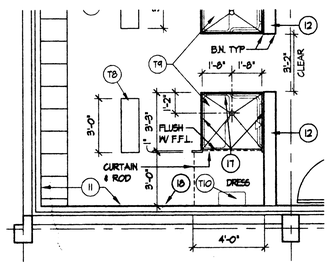

L7 A1.1 PLAN @ MEN'S SHOWER
scale: 1/4" = 1'-0"

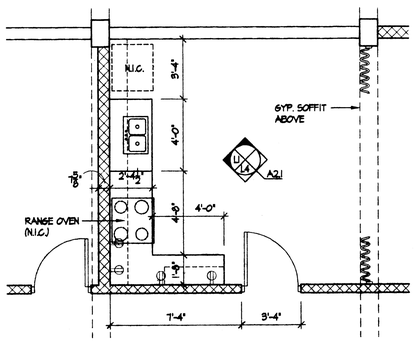

L9 A1.1 LARGE SCALE PLAN - KITCHEN
scale: 1/4" = 1'-0"

DEMOLITION NOTES

SEE MECH/ELEC DWGS FOR ADDITIONAL REMOVALS.

- D1 REMOVE 8" CMU WALLS (TYPICALLY 10'-0" AND 12'-0" HIGH).
- D2 REMOVE 8" CMU WALLS (TYPICALLY 7'-0" HIGH).
- D3 REMOVE 4" CMU CHASE WALLS (TYPICALLY 10'-0" HIGH).
- * D4 REMOVE STEEL ROLL UP DOOR AND ALL ASSOCIATED HARDWARE- MOTOR, CABLE PULLIES, TRACKS, ETC.
- D5 REMOVE BASE AT WALL CABINETS- SEE ALSO MECH/ELEC REMOVALS.
- D6 REMOVE HOLLOW METAL DOOR AND FRAME
- D7 REMOVE HOLLOW METAL DOOR, FRAME AND TRANSOM PANEL
- * D8 REMOVE MARBLE SCREENS AND STALLS
- * D9 REMOVE BENCHES
- D10 REMOVE 12" WIDE x 18" DEEP LOCKERS
- D11 REMOVE 6x9 STEEL TUBE (10'-0" HIGH).
- D12 REMOVE 6" (VARIABLE THICKNESS BELOW EXIST PARTITION, ETC.) CONC SLAB-ON-GRADE W/ WIRE MESH REINF. REMOVE FLOOR FINISHES (VCT IN LUNCHROOM, QT IN TOILET AND LOCKER ROOMS).
- D13 REMOVE GRATE AND CONCRETE TRENCH
- D14 REMOVE STEEL COLUMN AND HOIST BEAM & RELOCATE TO 2A IN STORAGE AREA
- D15 REMOVE WIRE STORAGE BIN (NII BY COUNTY)
- D16 REMOVE EXISTING BLOCK TO RECEIVE NEW DOOR

* TAG & TURN OVER TO OWNER

WORK NOTES

1. EXISTING 1/4" GLASS/ ALUM CLERESTORY
2. EXISTING LOUVER
3. EXISTING CONCRETE STRUCTURE
4. EXISTING CONCRETE PANEL
5. EXISTING DOOR AND TRANSOM
6. ARCHITECTURAL SPLIT-FACE CMU PER 04200
7. ALUM FRAME, NATURAL DARK ANODIZED FINISH, MATCH EXISTING.
8. EXISTING STEEL TUBE
9. CONCRETE WATER TABLE
10. INFILL WITH 8" CMU, PAINT FINISH ON ROOM SIDE
11. EXISTING CONCRETE BLOCK
12. CMU TO 6'-8"H + CAP/ DOWEL TO CONC SLAB, #4@ 24"+/-. PROVIDE C.T. WAINSCOT TO 6'-0" 6'-0" +/- B.S. TYPICAL.
13. CMU- START W/4" COURSE TO MATCH EXIST./ TYP. SEE PLAN FOR BLOCK WIDTH
14. EXISTING DOOR AND FRAME, PAINT B.S.
15. SOLID PLASTIC SCREEN / PER 10171
16. SOLID PLASTIC TOILET COMPARTMENT / PER 10171
17. SOLID PLASTIC SHOWER STALL / PER 10171
18. C.T. WAINSCOT TO 6'-0" A.F.F.
19. LOCKERS / PER 10500
20. PLASTIC LAM SHELF, 8"D x 2'-6"L x 7'-11/2". FRONT EDGE- ANGLE CORNER. PROVIDE BRACKET SUPPORT AS REQ'D TOP AT 3'2" +/-
21. LOW CMU WALL, 2'-8"H PLUS 4" CAP DOWEL TO FLOOR W/ #4@ 16" +/-
22. PATCH TWO HOLES WHERE PIPE & CONDUIT REMOVED, 8'-0" ABOVE GRADE. PATCH WHERE TWO CLAMP SCREWS REMOVED.

TOILET ACCESSORIES

- T1 ROBE HOOK
- T2 GRAB BARS
- T3 SOAP DISH (PROVIDE @ EA LAV)
- T4 MIRROR (PROVIDE @ EA LAV)
- T5 PAPER TOWEL DISPENDER/ WASTE RECEPTACLE
- T6 TOILET TISSUE DISPENSER (TYP @ EA W.C.)
- T7 MOP & BROOM HOLDER
- T8 LOCKER BENCH
- T9 FOLDING SHOWER SEAT
- T10 DRESS AREA SEAT

GENERAL NOTE

REFER TO GENERAL SPECIFICATIONS GS page 12 para. 5-034 FOR CONTRACTORS RESPONSIBILITIES RELATIVE TO SLEEVES, INSERTS, CHASES & EMBEDDED ITEMS.

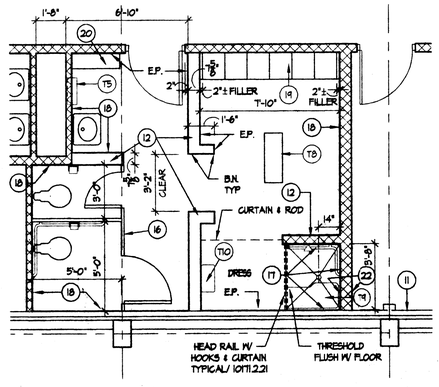

L12 A1.1 PLAN @ WOMEN'S SHOWER
scale: 1/4" = 1'-0"

no.	date	description	by
		REVISIONS	

It is a violation of the New York State education law for any person, unless acting under the direction of a licensed architect, to alter or add to this document in any way.
(title VIII, part 69, 5.0b)

REGISTERED ARCHITECT DAVID J. BONASSO 018609 NEW YORK

GARAGE MODIFICATIONS AT:
MEADOWBROOK-LIMESTONE
WASTEWATER TREATMENT PLANT
MARLBORO, NEW YORK
TOWN OF MARLBORO

sheet title
FLOOR PLANS, ELEVATIONS & BLDG SECTION

drawn TEF
checked JM
date 4/3/2000
file no. 99001.73
sheet no. A1.1

P:\SDSK\PROJ\99001\DWG\GONDOLA1.DWG PLOT DATE 04/11/2000

ROOM FINISH SCHEDULE

NO.	NAME	FLOOR MAT	FLOOR FIN	FLOOR COL	BASE MAT	BASE FIN	BASE COL	WALLS NORTH MAT	NORTH FIN	NORTH COL	EAST MAT	EAST FIN	EAST COL	SOUTH MAT	SOUTH FIN	SOUTH COL	WEST MAT	WEST FIN	WEST COL	CEILING MAT	CEILING FIN	CEILING COL	CEILING HGT	REMARKS
101	VEHICLE STORAGE	EX	-	-	EX	-	-	EX	-	-	EX	-	-	EX	-	-	EX	-	-	EX	-	-	EX	
102	STOCK ROOM	CONC	-	-	-	-	-	CMU	PT	●	EX	PT	●	CMU	PT	●	CMU	PT	●	(CONC)	PT	●	VARIES	
103	CORRIDOR	VCT	-	●	VB	-	●	CMU	PT	●	(CMU)	PT	●	CMU	PT	●	CMU	PT	●	(CONC)	-	-	11'-8" ±	
104	ELECTRICAL ROOM	CONC	-	-	-	-	-	CMU	PT	-	(CMU)	PT	●	CMU	PT	●	CMU	PT	●	(CONC)	-	-	11'-8" ±	PROVIDE PLASTIC SIGN / ELECTRIC ROOM
105	EMPLOYEE LOUNGE	VCT	-	●	VB	-	●	CMU/(CONC)	PT	●	(CMU)/CMU	PT	●	(CMU)	PT	●	CMU	PT	●	(CONC)	PT	●	VARIES	
106	OFFICE	VCT	-	●	VB	-	●	CMU	PT	●	CMU	PT	●	(CMU)	PT	●	(CMU)	PT	●	(CONC)	PT	●	11'-8" ±	
107	WOMEN'S TOILET/SHOWER	CMT	-	●	CT	-	●	CMU/(CONC)	PT	●	CMU	PT	●	CMU	PT	●	(CMU)	PT	●	(CONC)	PT	●	VARIES	C.T. WAINSCOT TO 6'-0" TYP. EXCEPT @ LOCKER WALL
108	MEN'S TOILET/SHOWER	CMT	-	●	CT	-	●	EX	PT	●	CMU	PT	●	CMU	PT	●	EX	PT	●	(CONC)	PT	●	VARIES	C.T. WAINSCOT TO 6'-0" TYP. EXCEPT @ LOCKER WALL
109	CORRIDOR	VCT	-	●	VB	-	●	EX/CMU	PT	●	CMU	PT	●	(CMU)	PT	●	CMU	PT	●	(CONC)	PT	●	VARIES	

NOTES:

1. MATERIAL / FINISH IN BRACKETS ( ) = EXISTING
2. ● = TO BE SELECTED
3. PAINT ALL EXPOSED DUCTWORK THROUGHOUT, CONDUIT, ETC.
4. FOR SIGNAGE SEE SPECS

DOOR SCHEDULE

DOOR NO.	LOCATION FROM	LOCATION TO	DOOR MAT	DOOR TYPE	DOOR QTY	DOOR WIDTH	DOOR HGT	DOOR THK	DOOR FIN	FRAME MAT	FRAME WIDTH	FRAME JAMB	FRAME HEAD	T'HOLD	LINTEL	HDWR GROUP	LABEL	REMARKS
EX-1	EXTERIOR	CORRIDOR 109	HM	B	1	3'-0"	7'-0"	1 3/4"	PT	HM	6"	L11/A2.1	L9/A2.1	YES	-	1	-	
EX-2	EXTERIOR	CORRIDOR 109	HM	B	1	3'-0"	7'-0"	1 3/4"	PT	HM	6"	A2.1	L9/A2.1	YES		1		
102	VEHICLE STORAGE 101	STOCK ROOM 102	HM	C	1	3'-0"	7'-0"	1 3/4"	PT	HM	8 3/4"	F13/A2.1	F13/A2.1	-	-	4	B	
103	CORRIDOR 109	CORRIDOR 103	HM	B	1	3'-0"	7'-0"	1 3/4"	PT	HM	6 3/4"	F11/A2.1	F11/A2.1	-	-	3	-	
103A	EX. GARAGE	CORRIDOR 103	HM	C	1	3'-0" (F.V.)	7'-0" (F.V.)	1 3/4"	PT	EX. HM	-	-	-	-	EX.	5	B	INSTALL NEW DOOR/HARDWARE IN EXISTING FRAME
104	CORRIDOR 109	ELECTRICAL ROOM 104	HM	B	1	3'-0"	7'-0"	1 3/4"	PT	HM	6 3/4"	F11/A2.1	F11/A2.1	-	-	2	-	
105	CORRIDOR 109	EMPLOYEE LOUNGE 105	HM	B	1	3'-0"	7'-0"	1 3/4"	PT	HM	6 3/4"	F11/A2.1	F11/A2.1	-	-	2	-	
105A	CORRIDOR 109	EMPLOYEE LOUNGE 105	HM	B	1	3'-0"	7'-0"	1 3/4"	PT	HM	6 3/4"	F11/A2.1	F11/A2.1	-	-	2	-	
106	CORRIDOR 109	OFFICE 106	HM	B	1	3'-0"	7'-0"	1 3/4"	PT	HM	6 3/4"	F11/A2.1	F11/A2.1	-	-	2	-	
106A	CORRIDOR 109	OFFICE 106	HM	B	1	3'-0"	7'-0"	1 3/4"	PT	HM	6 3/4"	F11/A2.1	F11/A2.1	-	-	2	-	
107	CORRIDOR 109	WOMEN'S TOILET/SHOWER	HM	A	1	3'-0"	7'-0"	1 3/4"	PT	HM	6 3/4"	F11/A2.1	F11/A2.1	-	-	6	-	
108	CORRIDOR 109	MEN'S TOILET/SHOWER	HM	A	1	3'-0"	7'-0"	1 3/4"	PT	HM	6 3/4"	F11/A2.1	F11/A2.1	-	-	6	-	

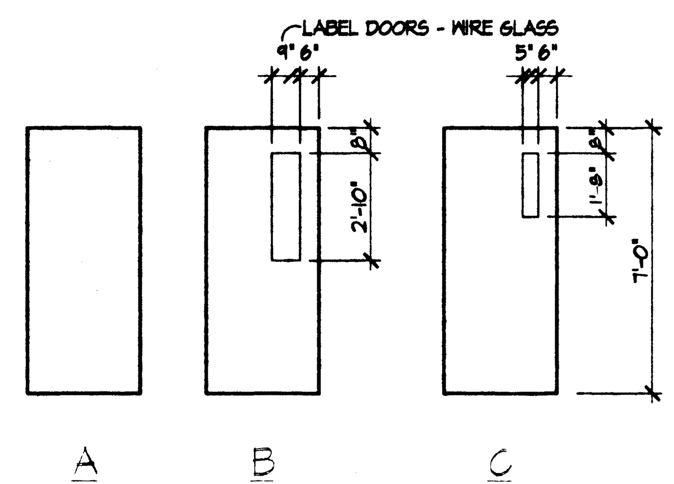

NOTE: ALL DOOR GLAZING SHALL BE TEMPERED GLASS UNLESS OTHERWISE NOTED.

F1 / A2.1 DOOR TYPES
scale: 1/4" = 1'-0"

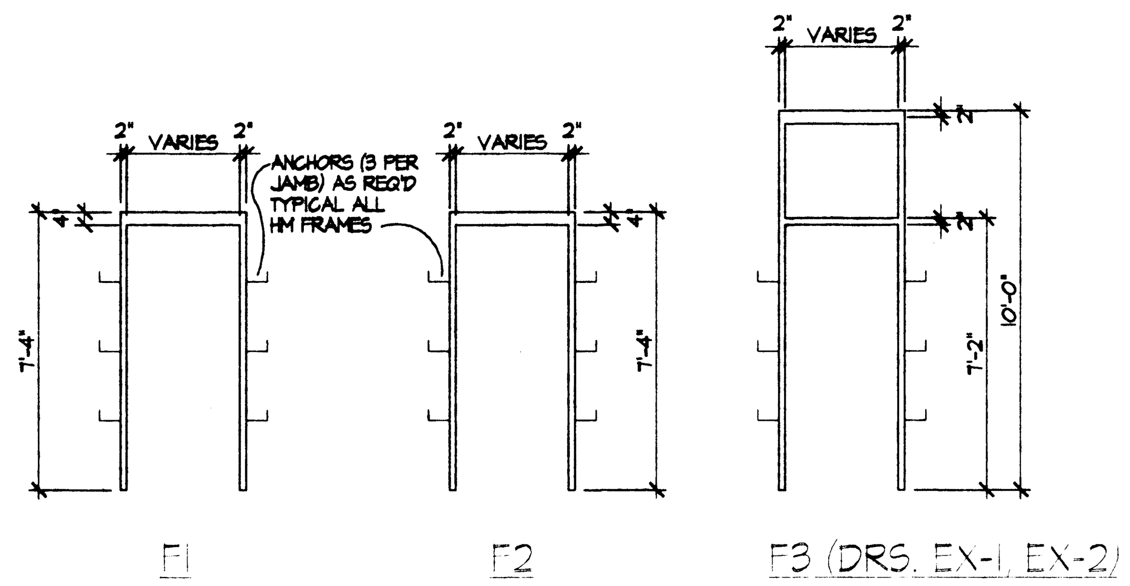

F4 / A2.1 DOOR FRAME TYPES
scale: 1/4" = 1'-0"

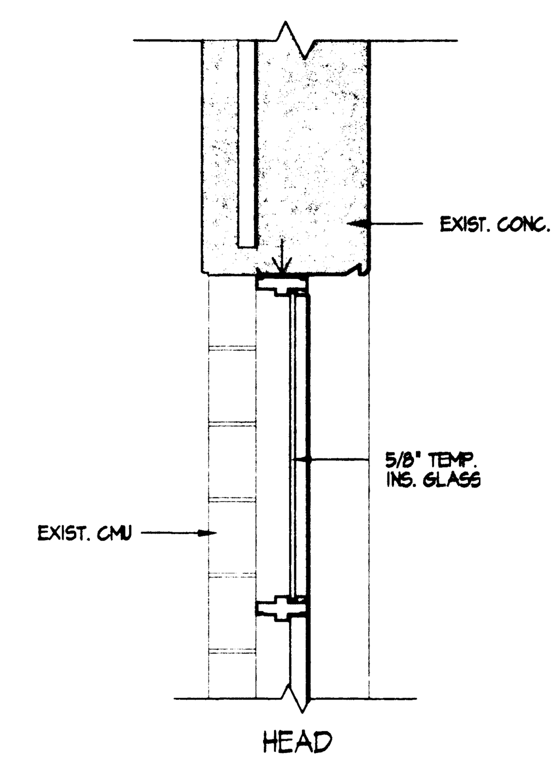

F7 / A2.1 DETAIL @ DOOR EX-2
scale: 3/4" = 1'-0"

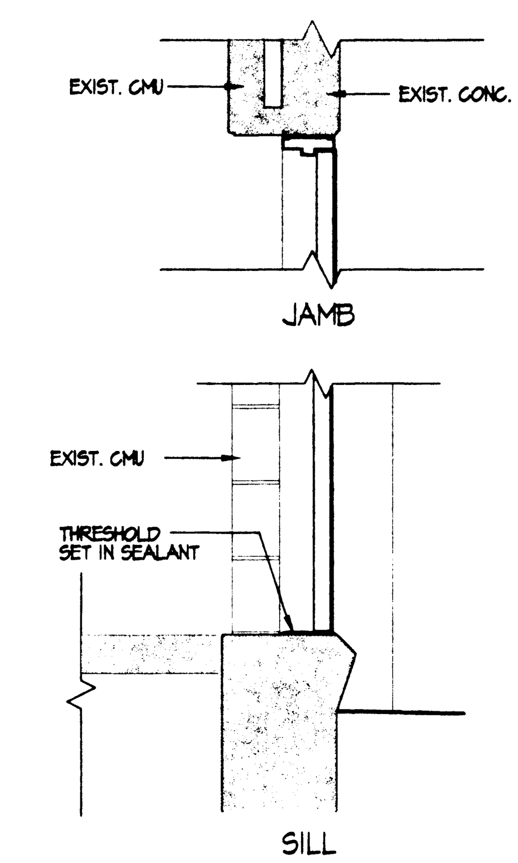

F9 / A2.1 DETAIL @ DOOR EX-2
scale: 3/4" = 1'-0"

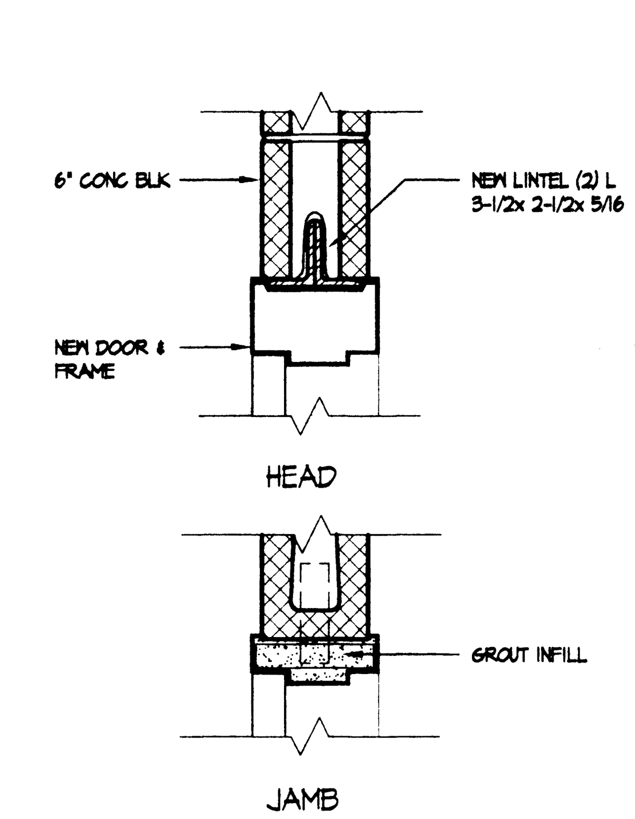

F11 / A2.1 DOOR DETAIL @ NEW WALLS
scale: 1 1/2" = 1'-0"

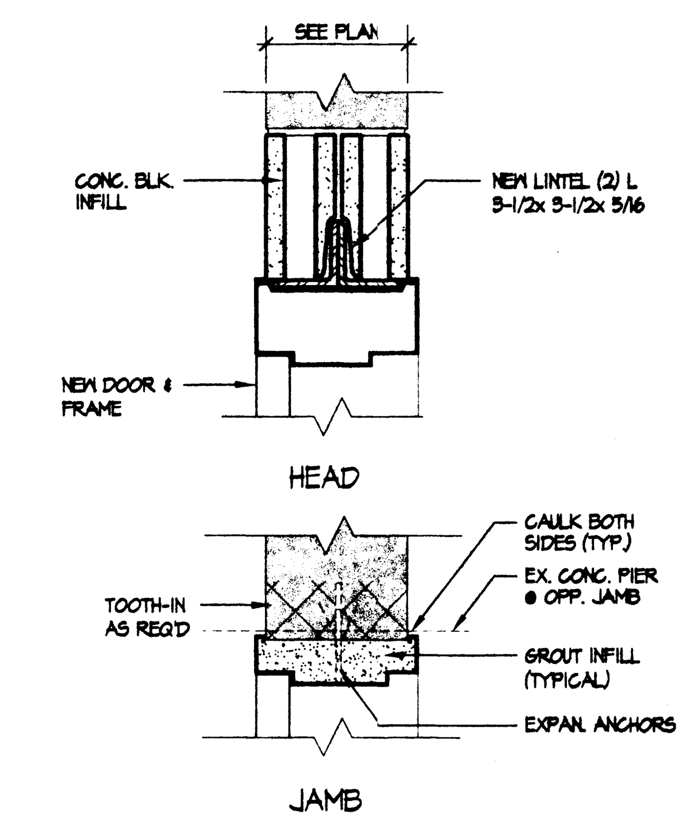

F13 / A2.1 DOOR DETAIL @ EXISTING WALL
scale: 1 1/2" = 1'-0"

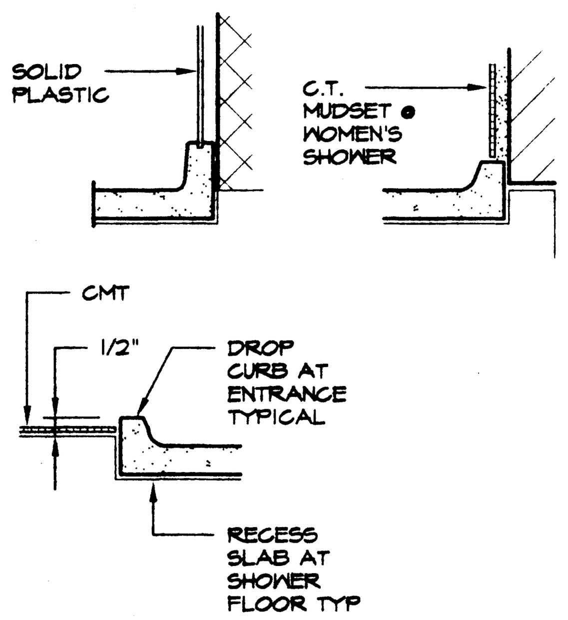

H1 / A2.1 SHOWER FLR RECEPTORS
scale: 1 1/2" = 1'-0"

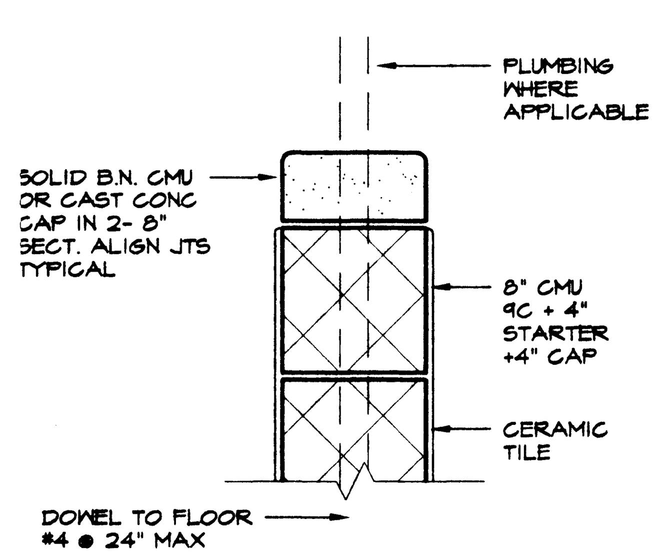

H3 / A2.1 LOW WALL DETAIL
scale: 1 1/2" = 1'-0"

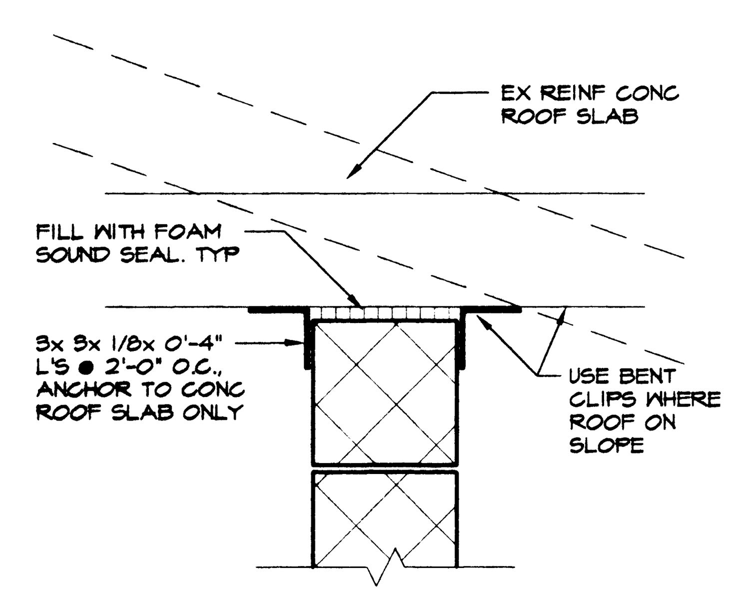

H5 / A2.1 DETAIL / T.O. BLK PARTITION
scale: 1 1/2" = 1'-0"

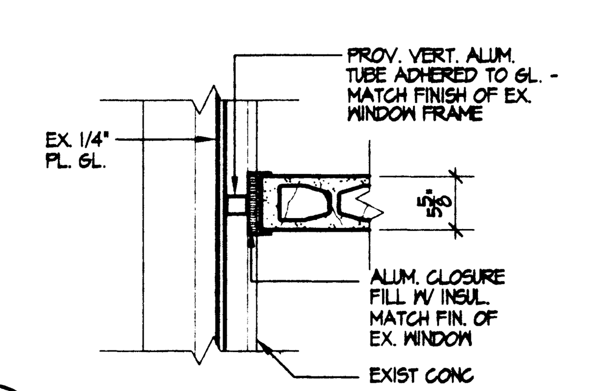

H9 / A2.1 PLAN DETAIL @ CLERESTORY
scale: 3/4" = 1'-0"

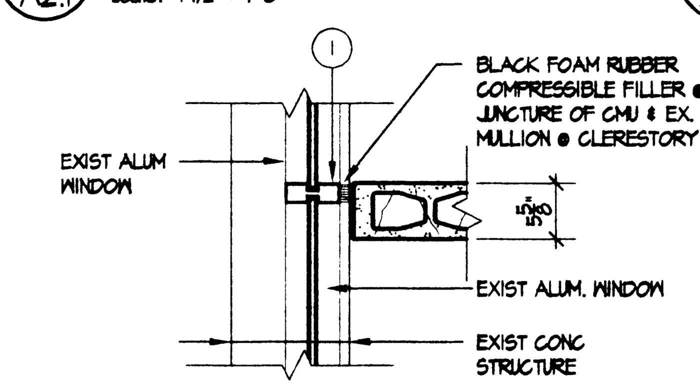

H11 / A2.1 PLAN DETAIL @ CLERESTORY
scale: 3/4" = 1'-0"

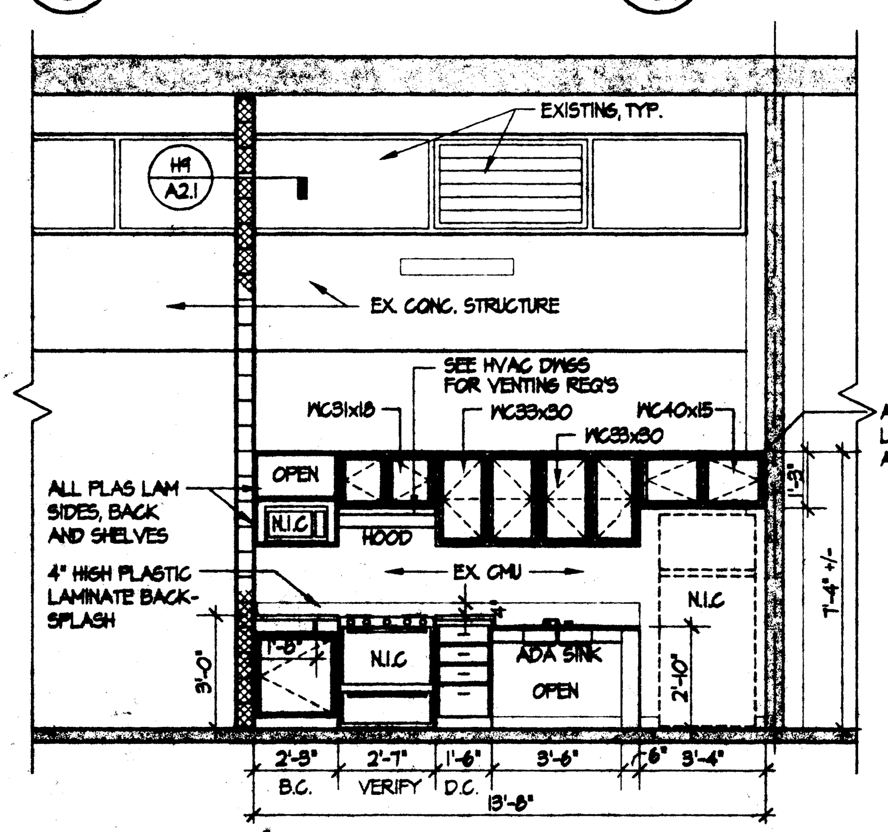

L1 / A2.1 ELEVATION- EMPLOYEE LOUNGE
scale: 1/4" = 1'-0"

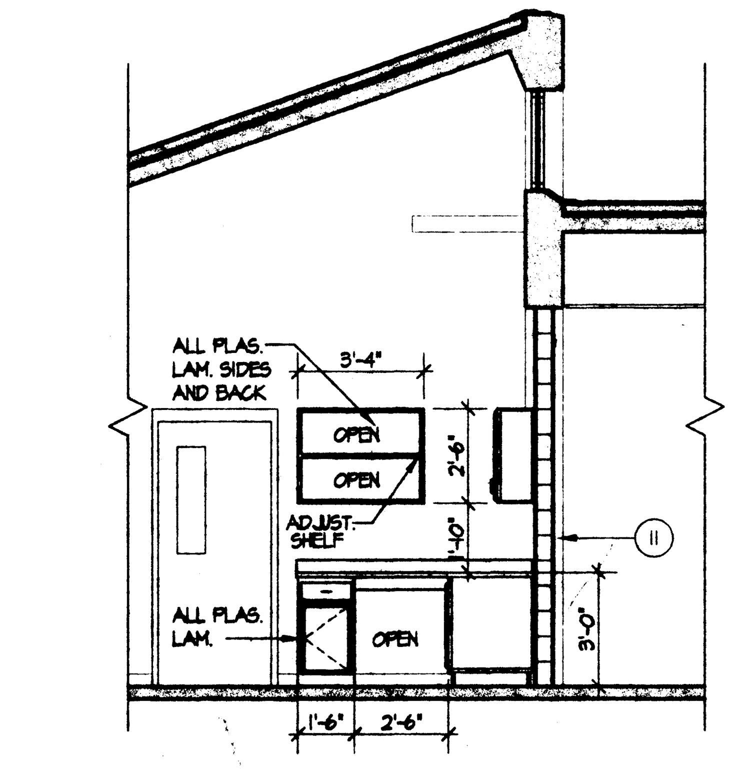

L4 / A2.1 ELEVATION- EMPLOYEE LOUNGE
scale: 1/4" = 1'-0"

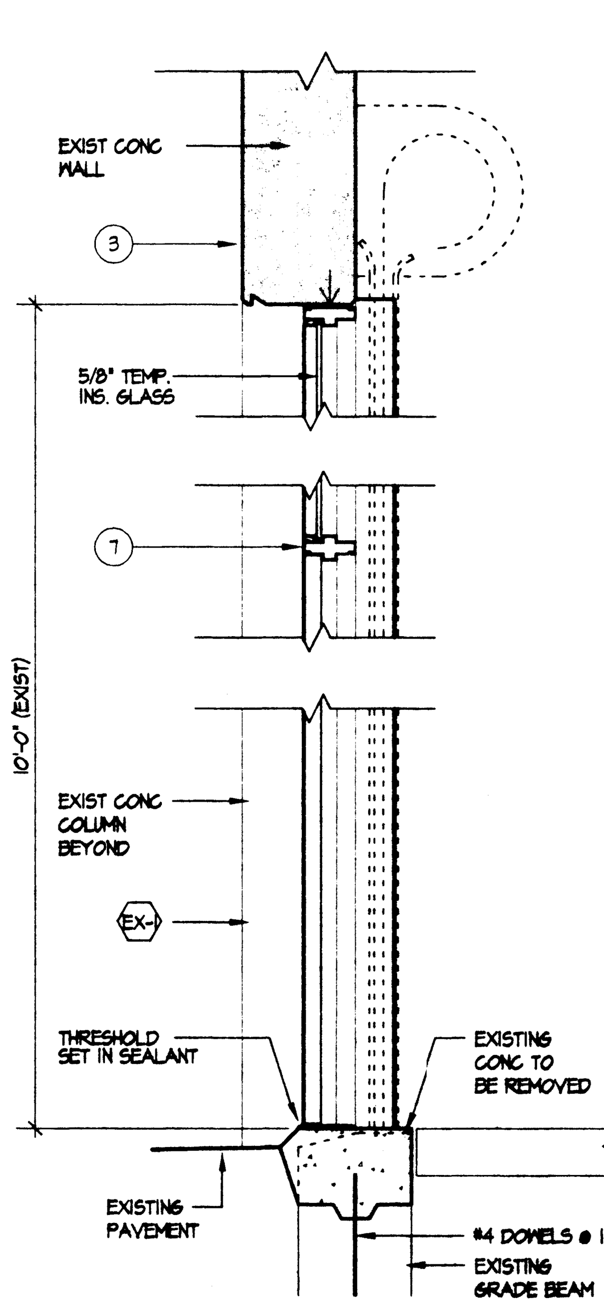

L7 / A2.1 WALL SECTION @ DOOR EX-1
scale: 3/4" = 1'-0"

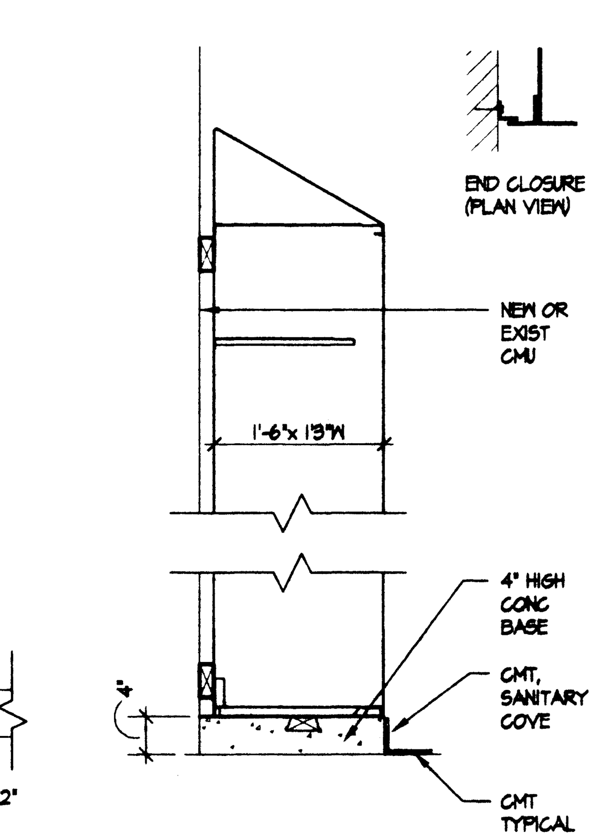

L9 / A2.1 LOCKER SECTION
scale: 3/4" = 1'-0"

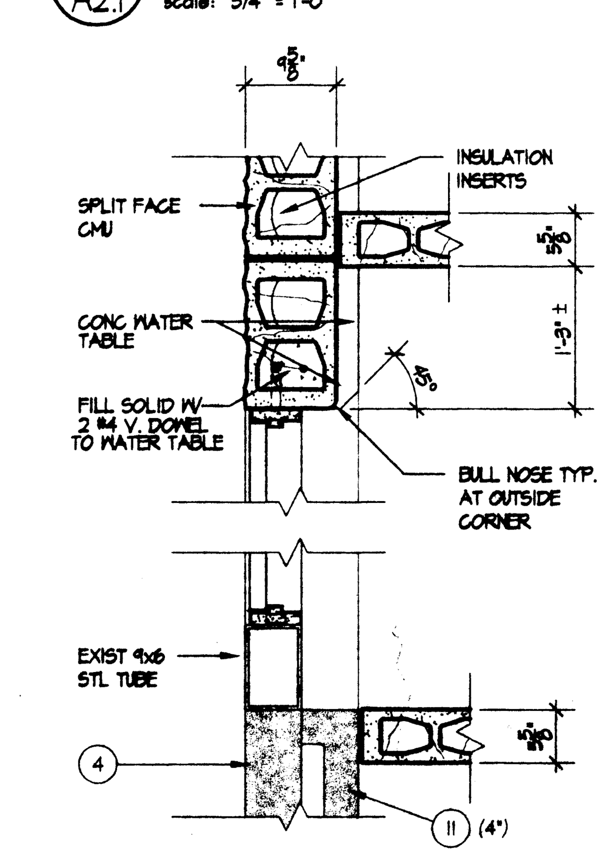

L11 / A2.1 PLAN DETAIL
scale: 3/4" = 1'-0"

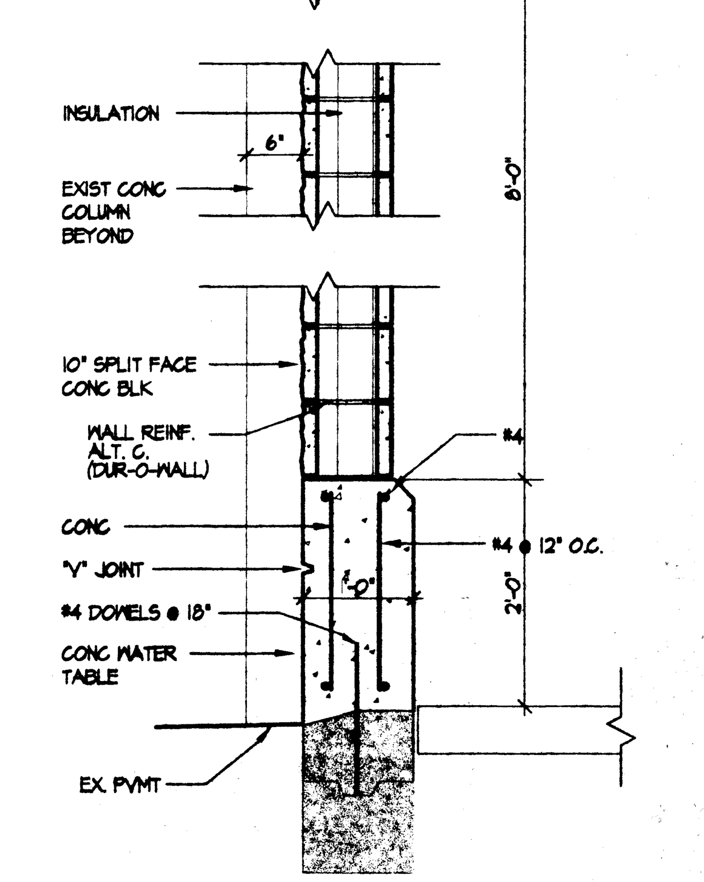

L13 / A2.1 WALL SECTION
scale: 3/4" = 1'-0"

REVISIONS — no. | date | description | by

It is a violation of the New York State education law for any person, unless acting under the direction of a licensed, registered architect, to alter an item on this document in any way.

title VIII, part 69. 50(b)

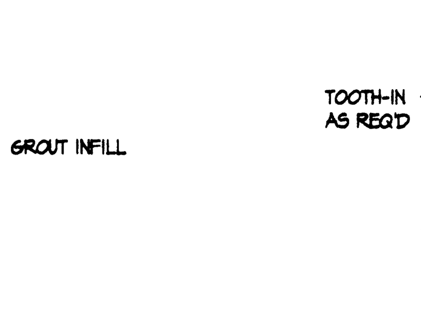

GARAGE MOFICATIONS AT:

MEADOWBROOK-LIMESTONE WASTEWATER TREATMENT PLANT

TOWN OF MANLIUS — MANLIUS, NEW YORK

FULJOSEH • FRASCOLA / ARCHITECTS pc

sheet title: **DOOR & ROOM FINISH SCHED. AND MISC DETAILS**

drawn TEF
checked JM
date 4/3/2000
file no. 99001.73
sheet no. **A2.1**

P:\SDSKPROJ\99001-00\DWG\CONDOC\A2_1.DWG PLOT DATE: 04/10/2000

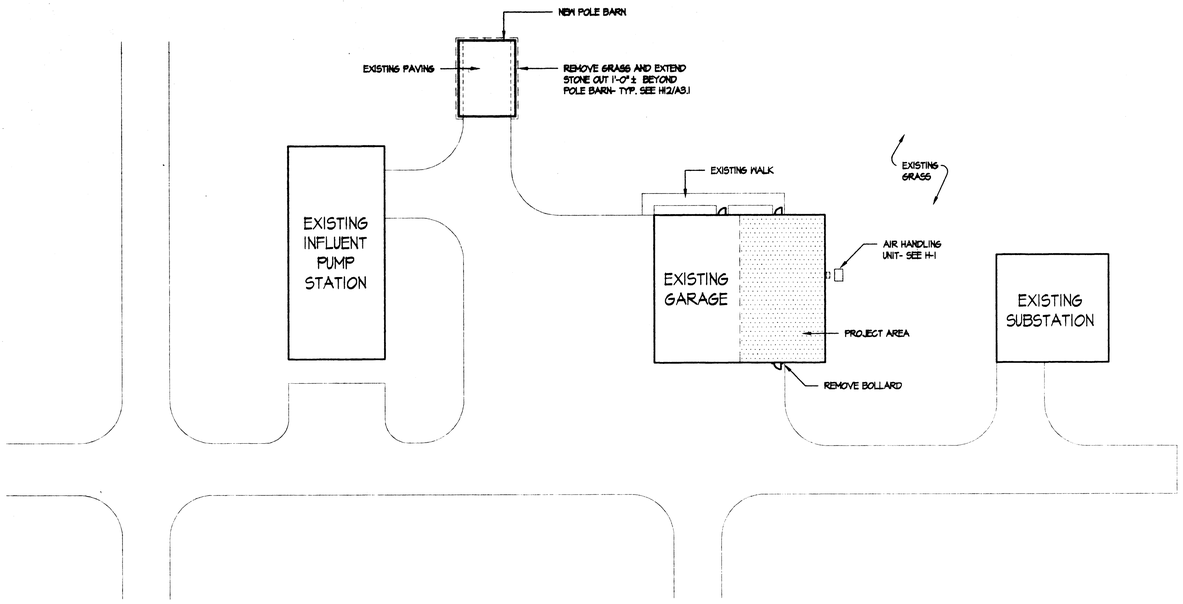

E1 / A3.1 PARTIAL SITE PLAN
scale: 1" = 50'-0"

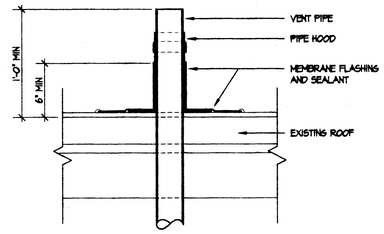

C12 / A3.1 ROOF VENT DETAIL
scale: 1 1/2" = 1'-0"

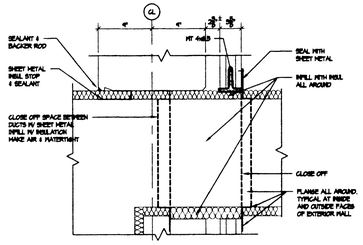

F9 / A3.1 SECTION AT HVAC DUCTS
scale: 1 1/2" = 1'-0"

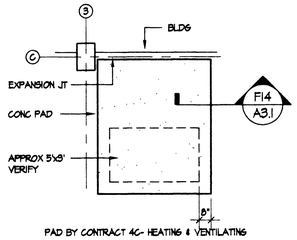

F12 / A3.1 PLAN- PAD FOR HVAC UNIT
scale: 1/4" = 1'-0"

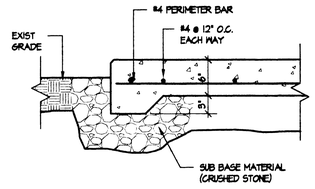

F14 / A3.1 SECTION AT HVAC PAD
scale: 1" = 1'-0"

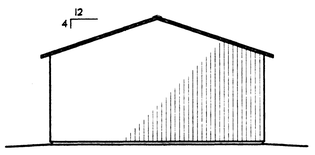

G1 / A3.1 SOUTH ELEVATION
scale: 1/8" = 1'-0"

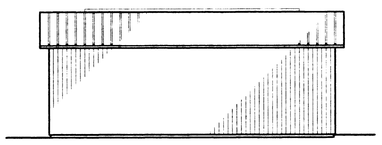

G3 / A3.1 EAST ELEVATION (WEST ELEV OPPOSITE)
scale: 1/8" = 1'-0"

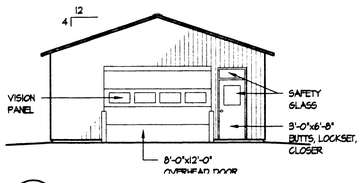

G6 / A3.1 NORTH ELEVATION
scale: 1/8" = 1'-0"

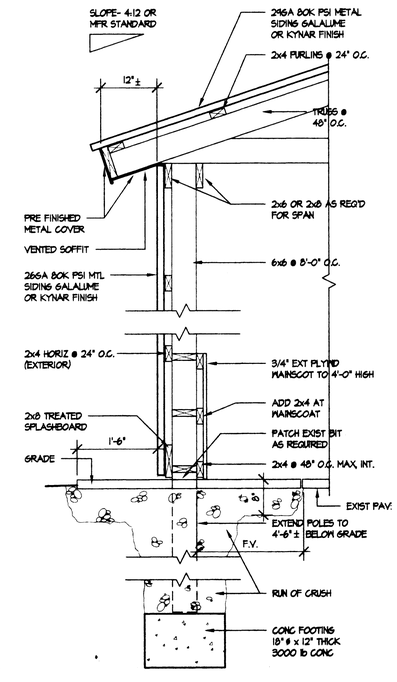

L9 / A3.1 WALL SECTION
scale: 3/4" = 1'-0"

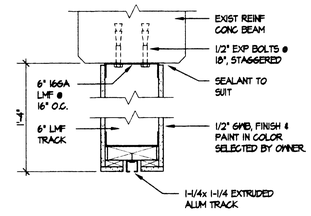

H12 / A3.1 HEAD DETAIL
scale: 1 1/2" = 1'-0"

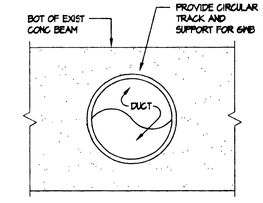

H14 / A3.1 ELEV @ DUCT PENETRATION
scale: 1 1/2" = 1'-0"

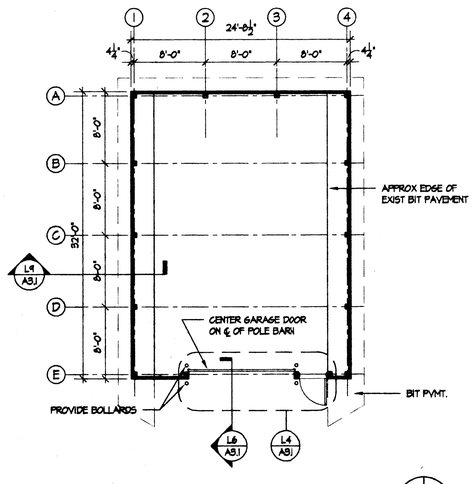

L1 / A3.1 POLE BARN FLOOR PLAN
scale: 1/8" = 1'-0"

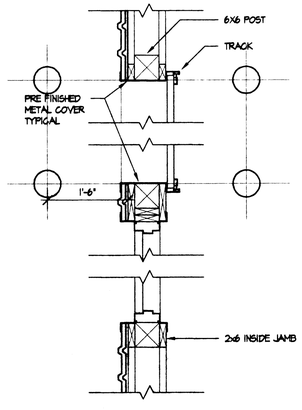

L4 / A3.1 PLAN DETAIL AT DOORS
scale: 3/4" = 1'-0"

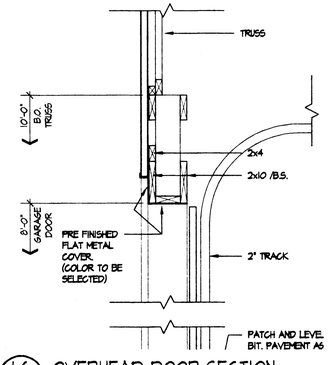

L6 / A3.1 OVERHEAD DOOR SECTION
scale: 3/4" = 1'-0"

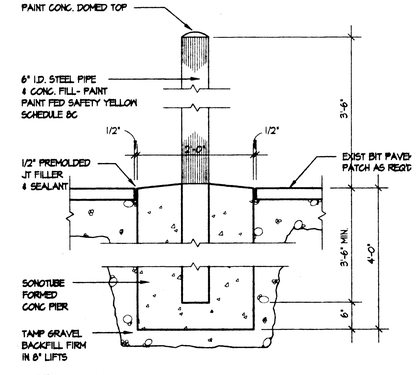

L12 / A3.1 BOLLARD DETAIL
scale: 3/4" = 1'-0"

no.	date	description	by

It is a violation of the New York State education law for any person, unless acting under the direction of a licensed professional architect, to alter an item on this document in any way.
title VIII, part 69, 5(h)

REGISTERED ARCHITECT DAVID J. BONACCI STATE OF NEW YORK

GARAGE MODIFICATIONS AT:
MEADOWBROOK-LIMESTONE WASTEWATER TREATMENT PLANT
TOWN OF MARLIES, NEW YORK

FOLSOM • FRASCONA / ARCHITECTS pc

sheet title
SITE PLAN, FLOOR PLAN & ELEVATIONS- POLE BARN

drawn TEF
checked JM
date 4/3/2000
file no. 99001.73
sheet no. A3.1

P:\5054\PROJ\99001-00\DWG\CONDOC\A3_1.DWG PLOT DATE: 04/10/2000

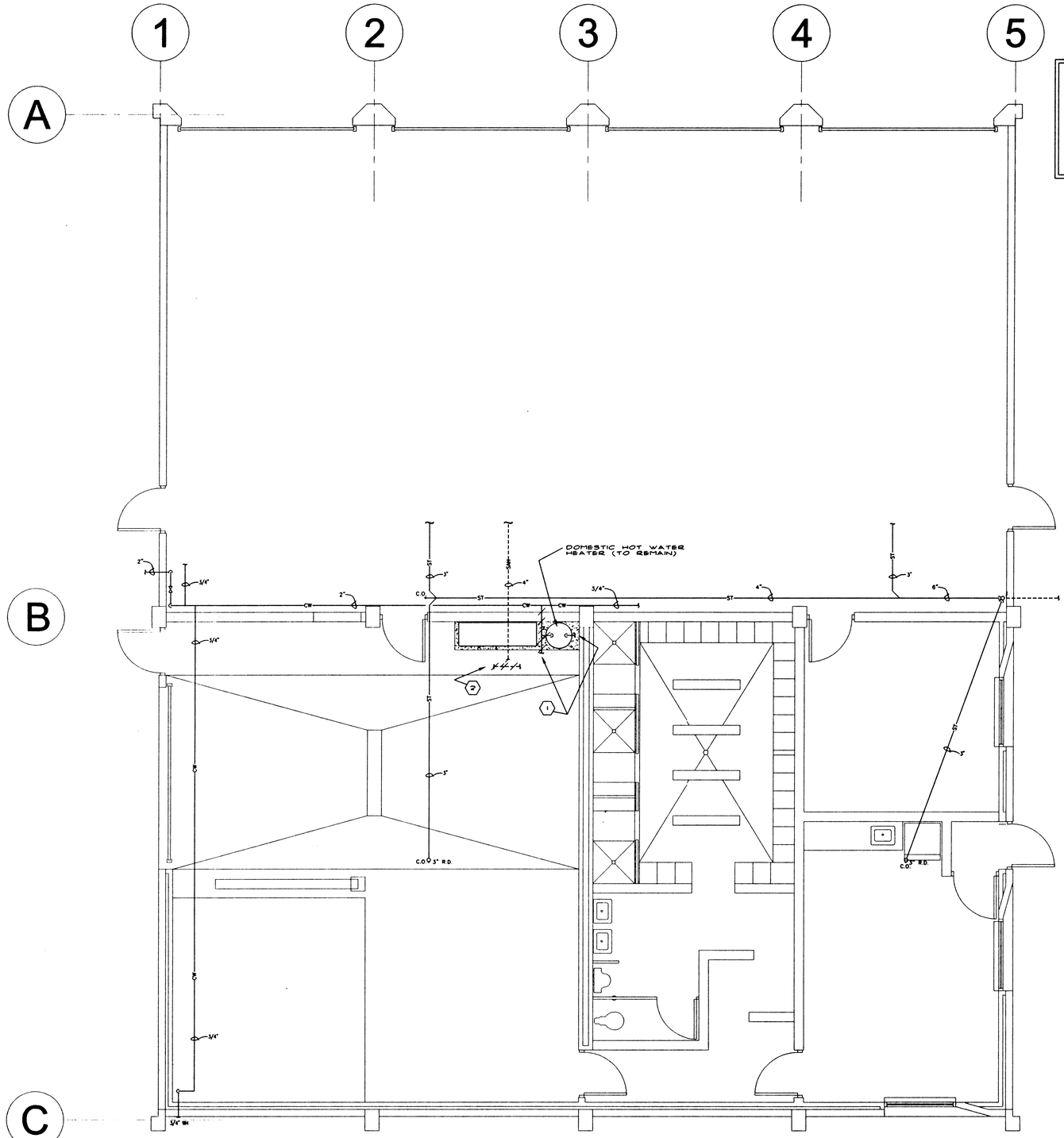

DRAWING NOTES

1. REMOVE ALL HW PIPING IN CONTRACT AREA BACK TO HOT WATER HEATER AND RECONNECT AS SHOWN ON NEW WORK PLAN. REMOVE ALL CW PIPING IN CONTRACT AREA BACK TO 2" MAIN AND RECONNECT AS SHOWN ON NEW WORK PLAN.
2. REMOVE ALL EXISTING SANITARY WASTE AND VENT PIPING IN CONTRACT AREA TO FIVE FEET OUTSIDE OF BUILDING. RECONNECT SANITARY DRAIN FROM GARAGE AREA AS INDICATED ON NEW WORK PLANS.

EXISTING FLOOR PLAN

SCALE: 1/4"=1'-0"

REVISIONS			
No.	date	description	by

It is a violation of the New York State education law for any person, unless acting under the direction of a licensed, registered architect, to alter an item on this document in any way.
(title VIII, part 69, 7209)

e-c engineering, pc
425 EAST WILLOW STREET
SYRACUSE, NEW YORK 13203
315-475-1177
E-#4

STATE OF NEW YORK · REGISTERED PROFESSIONAL ENGINEER · LICENSED

GARAGE MODIFICATIONS AT:
MEADOWBROOK-LIMESTONE WASTEWATER TREATMENT PLANT
MANLIUS, NEW YORK
TOWN OF MANLIUS
FULLONI • FLAGONA / ARCHITECTS
SYRACUSE • UTICA

sheet title
EXISTING FLOOR PLAN (PLUMBING)

drawn: MJL
checked: RN
date: 4/3/00
file no.: 99001.73
sheet no.: **P-1**

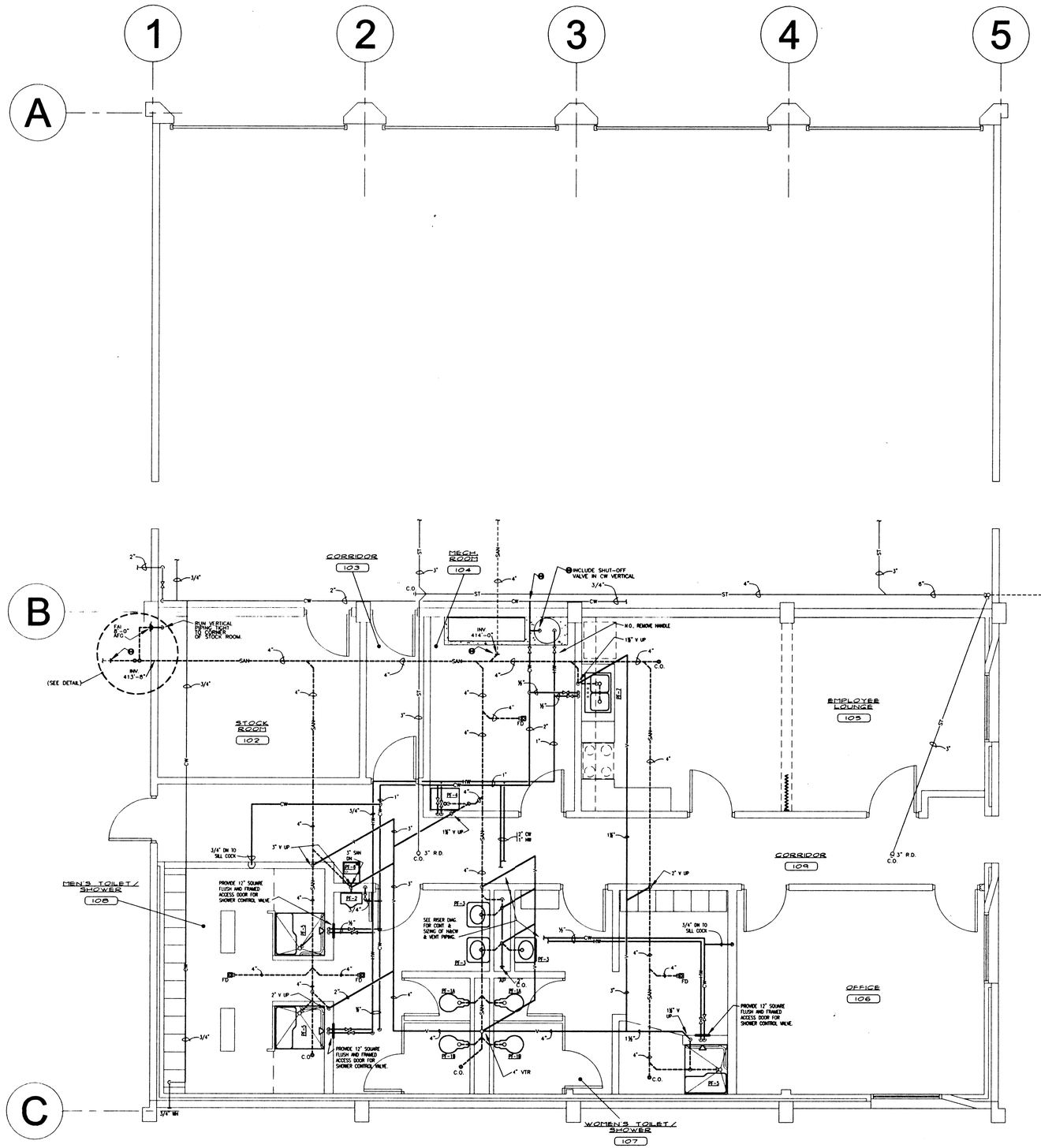

FLOOR PLAN

SCALE: 1/4"=1'-0"

revisions

no.	date	description	by

It is a violation of the New York State education law for any person, unless acting under the direction of a licensed, registered architect, to alter an item on this document in any way.

(title VIII, part 69, 2-b)

e-c engineering, pc
425 EAST WILLOW STREET
SYRACUSE, NEW YORK 13203
315-422-1179
EF-94

STATE OF NEW YORK
ROBERT E. NORTON JR.
083393
LICENSED PROFESSIONAL ENGINEER

GARAGE MODIFICATIONS AT:

MEADOWBROOK-LIMESTONE WASTEWATER TREATMENT PLANT

MANLIUS, NEW YORK

TOWN OF MANLIUS

FULLONE • FRAGOLA / ARCHITECTS SYRACUSE • UTICA

sheet title

FLOOR PLAN (PLUMBING)

drawn	MJL
checked	RN
date	4/3/00
file no.	99001.73
sheet no.	P-2

PLUMBING LEGEND

	EXISTING PIPING, DUCTWORK, AND/OR EQUIPMENT
	NEW PIPING, AND/OR EQUIPMENT
	EXISTING TO BE REMOVED
	DIRECTION OF FLOW
	DENOTES POINT OF CONNECTION BETWEEN NEW AND EXISTING
	PIPE DOWN
	PIPE UP
	PIPE OFF TOP OF MAIN
	PIPE OFF BOTTOM OF MAIN
	SHUT-OFF OR ISOLATION VALVE. SEE SPEC. FOR VALVE TYPE
C.O	CLEAN OUT
	CAPPED PIPE
C.O.	DECK PLATE CLEAN OUT
	SEPARABLE JOINT (UNION/FLANGE)
FD	FLOOR DRAIN
	SHOCK ABSORBER
	REDUCER OR INCREASER
AFF	ABOVE FINISHED FLOOR
AFG	ABOVE FINISHED GRADE
AP	WALL ACCESS PLATE
C.O.	CLEAN OUT
CW	DOMESTIC COLD WATER LINE
DN	DOWN
EWC	ELECTRIC WATER COOLER
HB	HOSE BIBB
HW	DOMESTIC HOT WATER LINE
LAV	LAVATORY
NO	NORMALLY OPEN
PD	PUMP DISCHARGE
PF-#	PLUMBING FIXTURE (NUMBER INDICATES TYPE AS SCHEDULED)
SAN	SANITARY OR SOIL LINE
ST	STORM
UR	URINAL
V	VENT LINE
VTR	VENT THRU ROOF
WC	WATER CLOSET
WH	WALL HYDRANT

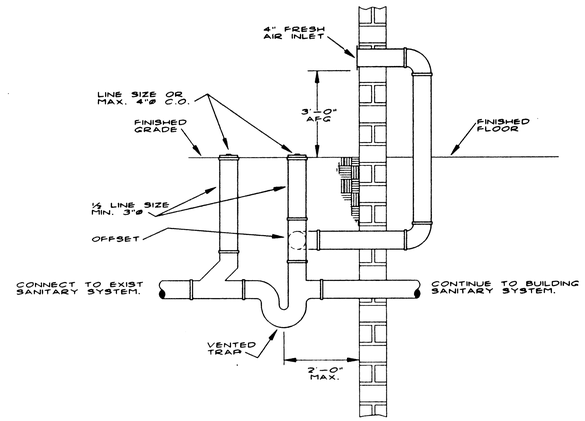

BUILDING TRAP AT SAN. SEWER CONNECTION DETAIL

SCALE: NONE

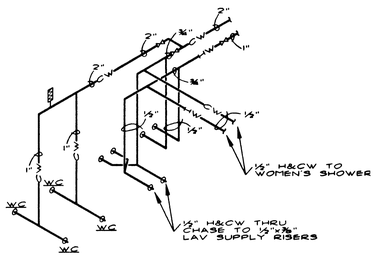

NOTE: SEE PLANS FOR ALL OTHER DOMESTIC H&CW PIPE SIZING THIS PROJECT.

DOMESTIC H&CW RISER DIAGRAM — RM. 107&108

SCALE: ⅛"=1'-0"

PLUMBING FIXTURE CONNECTION SCHEDULE

FIXTURE NO.	FIXTURE TYPE	CW	HW	TRAP	SAN	VENT	REMARKS
PF-1A	WATER CLOSET	1	-	-	4	2	
PF-1B	WATER CLOSET (ADA)	1	-	-	4	2	
PF-2	URINAL	3/4	-	-	2	1½	
PF-3	LAVATORY	½	½	1¼"x1½"	2	1½	
PF-4	MOP SERVICE BASIN	½	½	3	3	1½	
PF-5	SHOWER	½	½	3	3	1½	
PF-6	WATER COOLER	½	-	1¼ x 1½	2	1½	
PF-7	SINK	½	½"	1½ x 1½	2	1½	

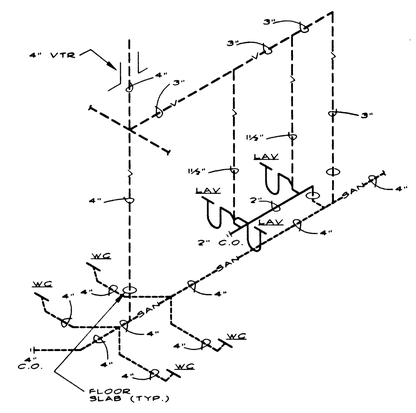

NOTE: SEE PLANS FOR ALL OTHER WASTE AND VENT PIPE SIZING THIS PROJECT.

VENT AND WASTE RISER DIAGRAM — RM. 107&108

SCALE: ⅛"=1'-0"

no.	date	description	by
		REVISIONS	

It is a violation of the New York State Education Law for any person, unless acting under the direction of a licensed, registered architect, to alter an item in any way.
title VIII, part 69, 5Fb

e-L engineering, pc
225 EAST WILLOW STREET
SYRACUSE, NEW YORK 13203
(315) 420-1179
E-#4

STATE OF NEW YORK · MARTIN C. MARTIN · 042313 · LICENSED PROFESSIONAL ENGINEER

GARAGE MODIFICATIONS AT:
MEADOWBROOK-LIMESTONE WASTEWATER TREATMENT PLANT
TOWN OF MANLIUS
MANLIUS, NEW YORK
FULGENZI • FLAGG • V / ARCHITECTS
SYRACUSE • UTICA

sheet title
SCHEDULES, LEGEND, DETAILS AND DIAGRAMS

drawn MJL
checked RN
date 4/3/00
file no. 9901.73

sheet no. **P-3**

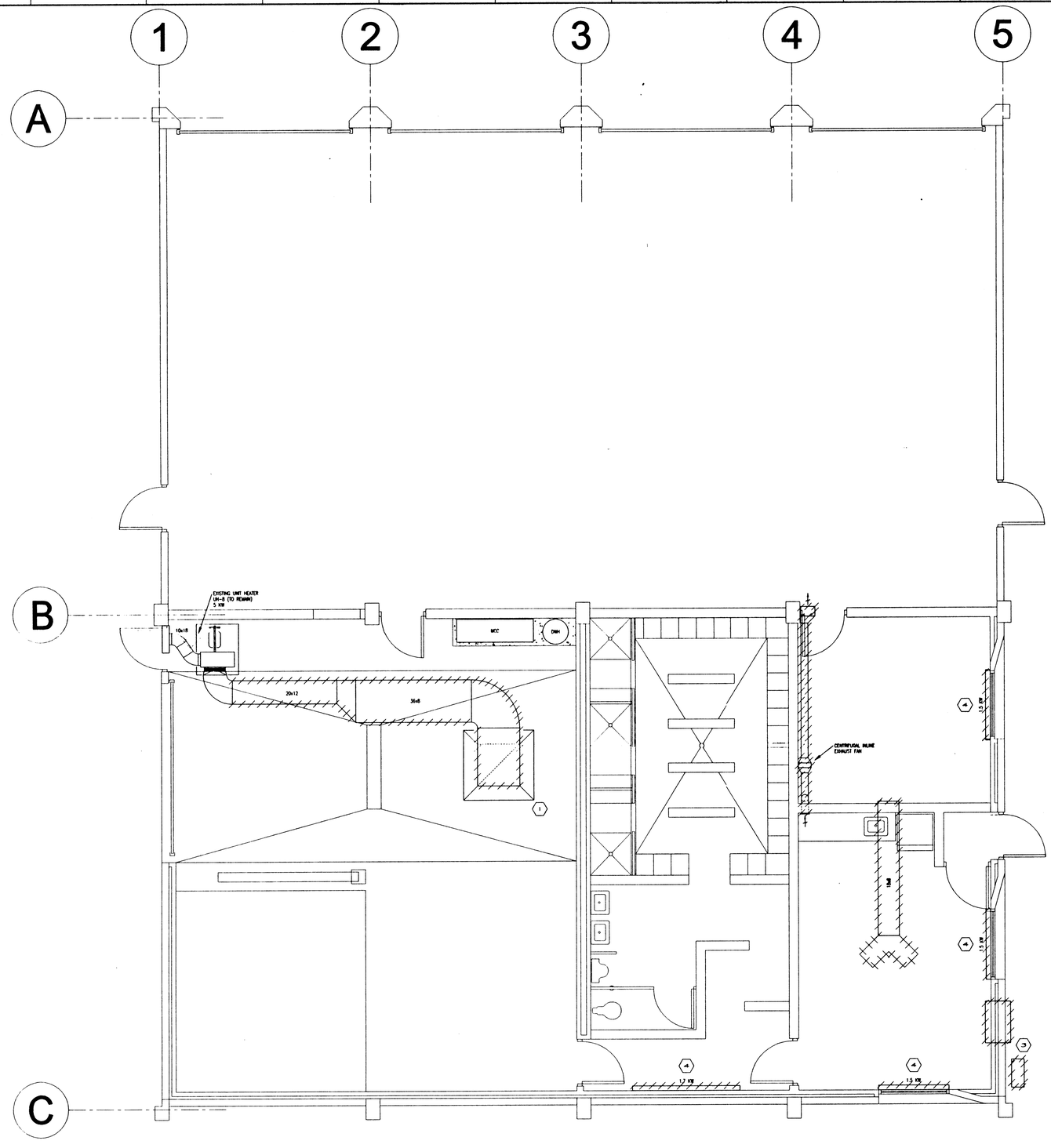

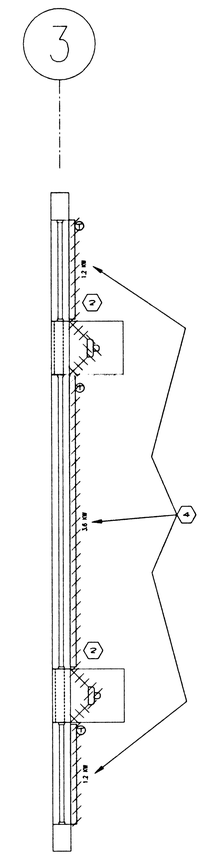

PARTIAL PLAN
AT CLERESTORY

NORTH

EXISTING FLOOR PLAN

SCALE: ¼"=1'-0"

GENERAL NOTES

1. REMOVE ALL UNIT AND BASEBOARD HEATERS AND ALL ASSOCIATED WIRING AND CONTROLS UNLESS OTHERWISE INDICATED TO REMAIN.

DRAWING NOTES

1. REMOVE AND RELOCATE EXISTING WELDING FUME HOOD TO GARAGE AREA AS INDICATED ON NEW WORK PLAN.
2. REMOVE EXISTING EXHAUST FAN, BACKDRAFT DAMPER AND ALL ASSOCIATED WIRING AND CONTROLS. LOUVER TO REMAIN FOR RECONNECTION AS INDICATED ON NEW WORK PLANS.
3. REMOVE EXISTING DUCTLESS SPLIT AIR CONDITIONING UNIT AND ALL ASSOCIATED PIPING, WIRING AND CONTROLS.
4. REMOVE EXISTING ELECTRIC BASEBOARD HEATERS AND ALL ASSOCIATED PIPING, WIRING AND CONTROLS.

no.	date	description

It is a violation of the New York State education law for any person, unless acting under the direction of a licensed, registered architect, to alter an item in this document in any way.

title 7TEL, part 68, 2Ch)

e-c engineering pllc
625 EAST WILLOW STREET
SYRACUSE, NEW YORK 13203
(315) 425-1179
EF-494

STATE OF NEW YORK
RICHARD NORTHWAY
STATE REGISTERED PROFESSIONAL ENGINEER

GARAGE MODIFICATIONS AT:
MEADOWBROOK-LIMESTONE
WASTEWATER TREATMENT PLANT

TOWN OF MANLIUS
MANLIUS, NEW YORK

FULGONI • FILAGOLA / ARCHITECTS
SYRACUSE • UTICA

sheet title
EXISTING FLOOR PLAN (HVAC)

drawn MJL
checked RN
date 4/3/00
file no. 99001.73
sheet no. **H-1**

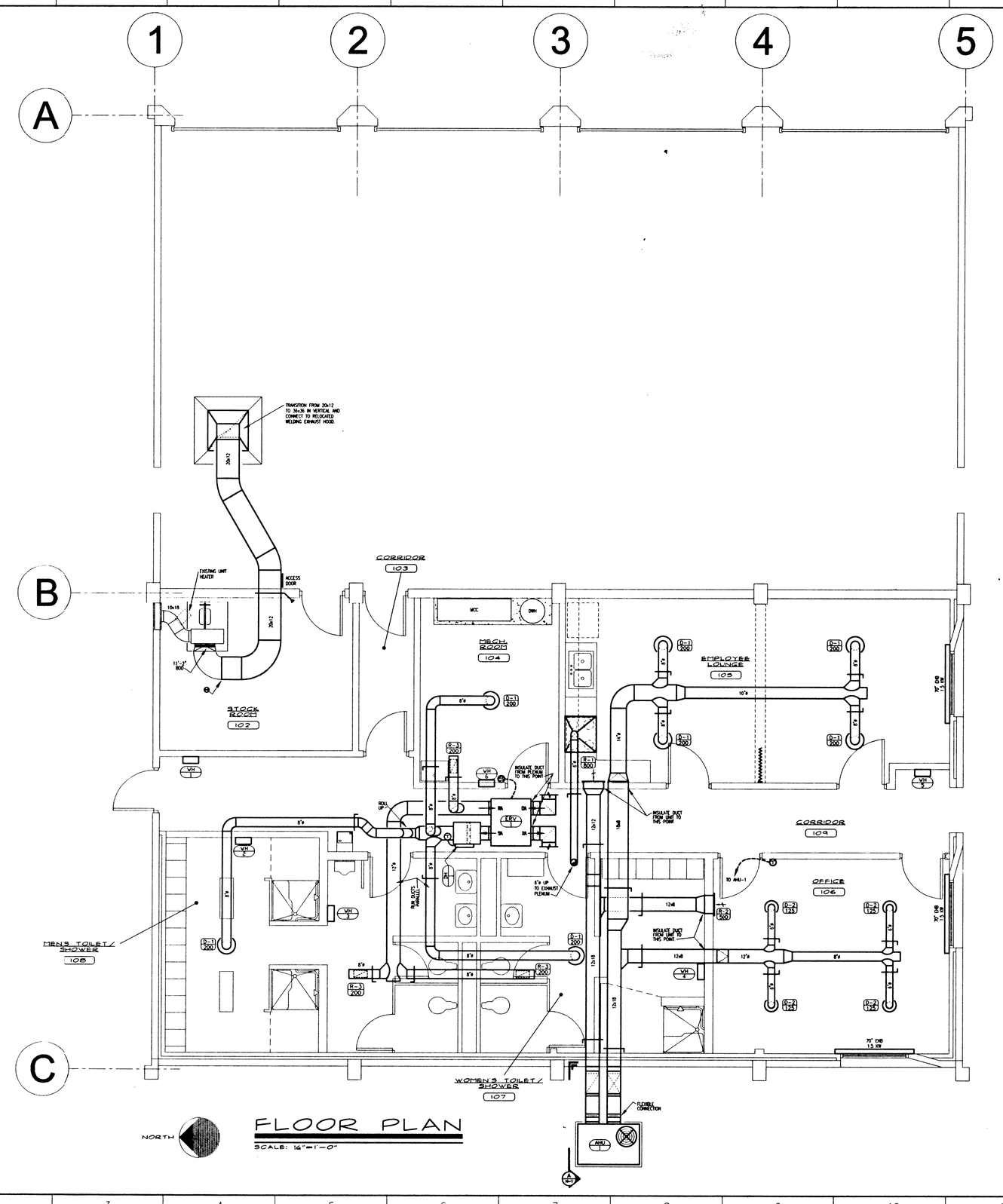

DRAWING NOTES

1. CONSTRUCT SMOOTH TRANSITION FROM PLENUM TO NEW BACKDRAFT DAMPER SIZED TO MATCH EXISTING LOUVER.

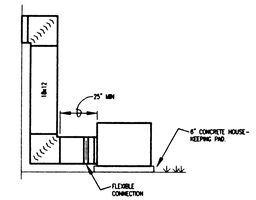

A / H-1 ELEVATION

SCALE: 1/4" = 1'-0"

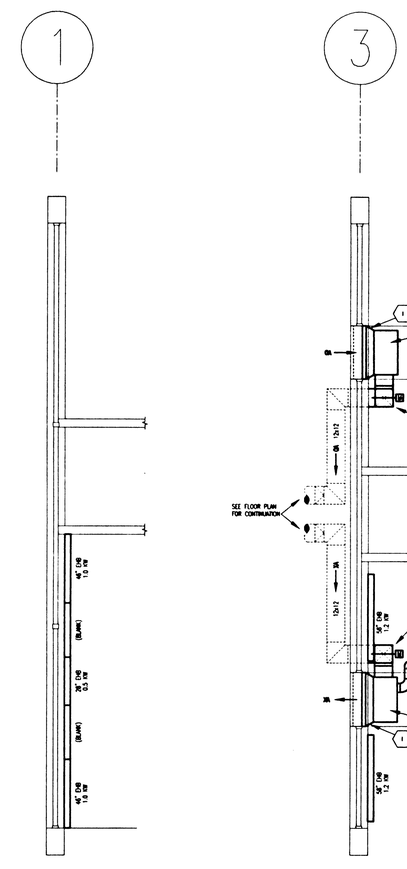

PARTIAL PLAN AT CLERESTORY

PARTIAL PLAN AT CLERESTORY

REVISIONS

no.	date	description

It is a violation of the New York State education law for any person, unless acting under the direction of a licensed, registered architect, to alter in any way, this document.

title TITLE, part 68, 2(b)

e-c engineering, pc
425 EAST MILLOW STREET
BINGHAMTON, NEW YORK 13903
(315) 722-1179
E-44

STATE OF NEW YORK · RICHARD NORTON · LICENSED PROFESSIONAL ENGINEER · 071170

GARAGE MODIFICATIONS AT:

MEADOWBROOK-LIMESTONE WASTEWATER TREATMENT PLANT

TOWN OF MANLIUS, MANLIUS, NEW YORK

FORTGANG • FRAGOLA / ARCHITECTS, SYRACUSE • UTICA

sheet title

FLOOR PLAN (HVAC)

drawn	MJL
checked	RN
date	4/3/00
file no.	99001.73
sheet no.	H-2

HVAC LEGEND

	EXISTING PIPING, DUCTWORK, AND/OR EQUIPMENT
	NEW PIPING, DUCTWORK, AND/OR EQUIPMENT
	EXISTING TO BE REMOVED
	DIRECTION OF FLOW
TAG	EQUIPMENT TAG (SEE SCHEDULES)
	DENOTES POINT OF CONNECTION BETWEEN NEW AND EXISTING
	THERMOSTAT (ARROW POINTS TO CONTROLLED UNIT)
	SUPPLY DUCT UP/DOWN
	RETURN, EXHAUST, OR OUTSIDE AIR DUCT UP/DOWN
	FLEXIBLE CONNECTION
	AIR FLOW DIRECTION
	CEILING DIFFUSER, ARROWS INDICATE DIRECTION OF AIR FLOW. NECK AS INDICATED ON SCEDULE.
	FIRE DAMPER VERTICAL/HORIZONTAL
	BLANK-OFF DUCTWORK. (DOUBLE/SINGLE LINE)
	AUTOMATIC AIR DAMPER
AD	ACCESS DOOR
AFF	ABOVE FINISHED FLOOR
AHU	AIR HANDLING UNIT
BDD	BACKDRAFT DAMPER
CFM	CUBIC FEET PER MINUTE
D	DRAIN
DWG	DRAWING
EA	EXHAUST AIR
EF	EXHAUST FAN
ERV	ENERGY RECOVERY VENTILATOR
EXH	EXHAUST
GC	GENERAL CONTRACTOR
GPM	GALLONS PER MINUTE
EHB	ELECTRIC HYDRONIC BASEBOARD HEATER
NIC	NOT IN CONTRACT
KW	KILOWATTS
OA	OUTSIDE AIR
RA	RETURN AIR
SA	SUPPLY AIR
SS	STAINLESS STEEL
UH	UNIT HEATER
VD	VOLUME DAMPER
WH	WALL HEATER
XA	EXHASUT AIR

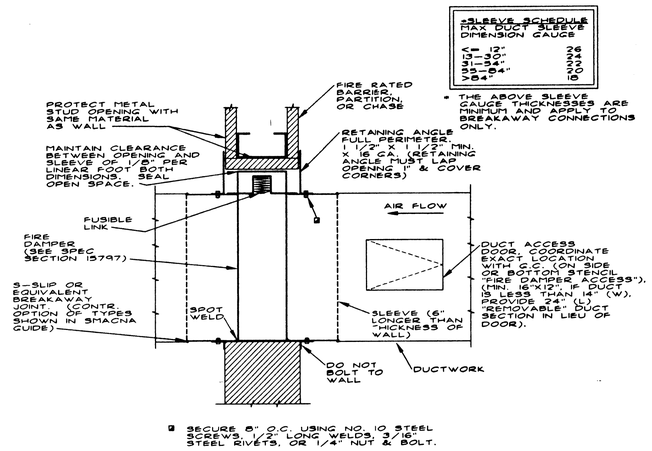

*SLEEVE SCHEDULE	
MAX DUCT SLEEVE DIMENSION	GAUGE
1-12"	26
13-30"	24
31-54"	22
55-84"	20
>84"	18

* THE ABOVE SLEEVE GAUGE THICKNESSES ARE MINIMUM AND APPLY TO BREAKAWAY CONNECTIONS ONLY.

@ SECURE 8" O.C. USING NO. 10 STEEL SCREWS, 1/2" LONG WELDS, 3/16" STEEL RIVETS, OR 1/4" NUT & BOLT.

FIRE/SMOKE DAMPER DETAIL

SCALE: NONE

NOTES:

- VERTICAL DAMPER IS SHOWN, HORIZONTAL DAMPER IS SIMILAR WITH THE ADDITION OF CLOSURE SPRING.
- INSULATE EXPOSED DUCT WHEN SOUND LINING IS USED, OR WHERE REQUIRED.

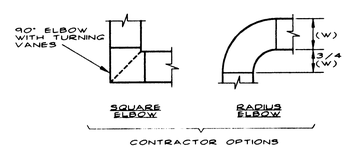

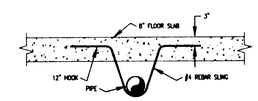

UNDER SLAB PIPE SUPPORT

SCALE: NONE

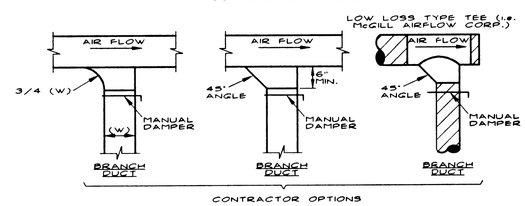

DUCT DETAILS

SCALE: NONE

DUCT HEATER							
TAG	TYPE	CFM	INPUT (KW)	STAGES	DUCT CONN. SIZE	MANUFACTURER	REMARKS
DH-1	IN-LINE	800	10	2	12"ø	WARREN	ROUND DUCT CON.

ENERGY RECOVERY VENTILATOR								
TAG	MODEL	CFM	INPUT (WATTS)	FILTER LIFE (HRS)	DUCT CONN. SIZE	MIN. TEMPERATURE EFFECTIVENESS	MANUFACTURER	REMARKS
ERV-1	HE-900	800	1150	5000	12"ø	68%	LOSSNAY/MITSUBISHI	-

GRILLE, REGISTER, AND DIFFUSER SCHEDULE							
TAG	DESCRIPTION	MODEL	BLOW PATTERN	NECK SIZE (IN)	FACE SIZE (IN)	MOUNTING TYPE	REMARKS
D-1	SUPPLY DIFFUSER	SSAA	360 deg.	6"ø	14"ø	DUCT	ADJUSTABLE
D-2	SUPPLY DIFFUSER	SSAA	360 deg.	8"ø	18"ø	DUCT	ADJUSTABLE
R-1	RETURN REGISTER	RTAAH	-	18x18	20x20	SURFACE	45 deg. HOR.
R-2	RETURN REGISTER	RTAAH	-	14x14	16x16	SURFACE	45 deg. HOR.
R-3	RETURN REGISTER	RNJA	-	12x6	14x8	DUCT	45 deg. HOR.

DESIGN BASIS: CARNES
NOTE: RETURN REGISTER R-3 TO BE ALUMINUM WITH ALUMINUM DAMPERS.

AIR HANDLING UNIT SCHEDULE	
TAG	AHU-1
AREA SERVED	OFFICE/ LOUNGE
MODEL	TCC042F300B
SUPPLY FAN	
TOTAL SUPPLY AIR FLOW (CFM)	1300
MIN. OUTSIDE AIR (CFM)	130
EXTERNAL STATIC PRESSURE	.54
FAN SPEED (RPM)	1080
MOTOR HORSEPOWER	1/3
COOLING	
ENTERING DRY BULB/WET BULB	78/67
TOTAL CAPACITY (MBH)	42.0
SENSIBLE CAPACITY (MBH)	26.0
AMBIENT TEMPERATURE	95
EER/SEER AT ARI CONDITIONS	8.6/10.0
COMPRESSORS	1
HEATING	
KW (TOTAL)	7.47
STAGES	2
SYSTEM POWER (VOLTAGE/PHASE)	208/3
ACCESSORIES	
ECONOMIZER	YES
7 DAY PROGRAMMABLE T'STAT	YES

WALL HEATER SCHEDULE				
TAG	LOCATION	CAPACITY	MODEL	REMARKS
WH-1	CORRIDOR 109	2.0 KW	AWH-4204	
WH-2	MEN'S RM. 108	3.0 KW	AWH-4404	
WH-3	MEN'S RM. 108	2.0 KW	AWH-4204	
WH-4	WOMEN'S RM. 107	3.0 KW	AWH-4404	
WH-5	CORRIDOR 109	2.0 KW	AWH-4204	
WH-6	MECH. RM. 104	1.5 KW	AWH-4204	
UH-8	STOCK ROOM 102	-	EXISTING	TO REMAIN

DESIGN BASIS: Q-MARK

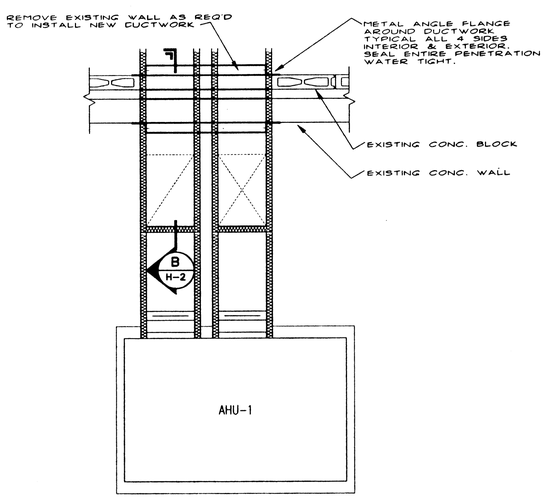

DUCT PENETRATION DETAIL—PLAN

SCALE: NONE

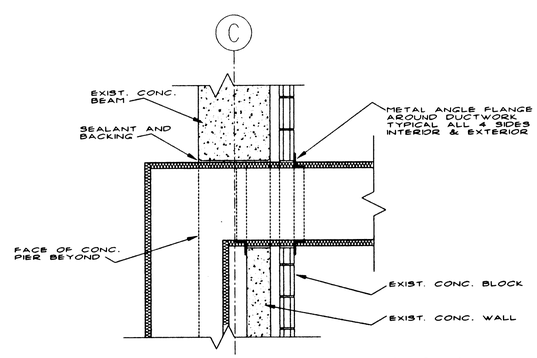

B
H-2

DUCT PENETRATION DETAIL—SECTION

SCALE: NONE

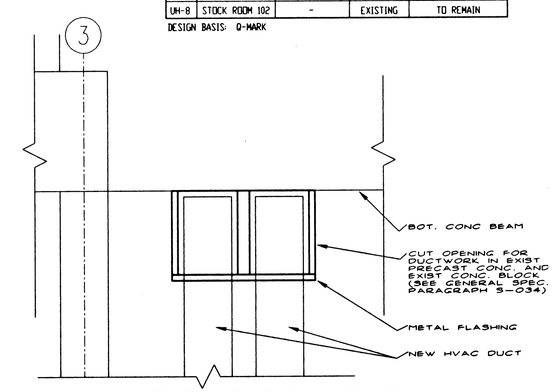

DUCT PENETRATION DETAIL—ELEVATION

SCALE: NONE

no.	date	description	by

REVISIONS

It is a violation of the New York State education law for any person, unless acting under the direction of a licensed professional engineer, to alter an item on this document in any way.
(title VIII, part 69, 7209)

e-c engineering, pc
600 EAST MAIN STREET
ROCHESTER, NEW YORK 14605
(716) 423-1179
E-mail

STATE OF NEW YORK
RICHARD N. CARNES
083393
LICENSED PROFESSIONAL ENGINEER

GARAGE MODIFICATIONS AT:
MEADOWBROOK-LIMESTONE WASTEWATER TREATMENT PLANT
TOWN OF MANLIUS
MANLIUS, NEW YORK
PROJECT • PERGOLA / ARCHITECTS
SYRACUSE • OFFICE

sheet title
SCHEDULES, LEGEND AND DETAILS

drawn: MJL
checked: RN
date: 4/3/00
file no. 99001.73
sheet no. **H-3**

EQUIPMENT WIRING SCHEDULE PHASE 1

		EQUIPMENT/MOTOR						BRANCH CIRCUIT PARAMETERS (CU)				CONTACTOR/MOTOR STARTER													DISCONNECT							
															DESCRIPTION								COVER									
ITEM NUMBER	UNIT NUMBER ②	DESCRIPTION	LOCATION	HORSEPOWER/ KW/KVA (AS NOTED)	PHASE	NAMEPLATE VOLTAGE	INTERLOCK WITH	SUPPLY VOLTAGE	PANEL OR CONTROL CENTER	CIRCUIT BREAKER	WIRING	LOCATION	FURNISHED BY	INSTALLED BY	MANUAL	MAGNETIC	COMBINATION MAGNETIC UNFUSED	COMBINATION MAGNETIC FUSED	OTHER	AUXILIARY CONTACTS	ACCESSORIES	REMOTE PUSHBUTTON	BLANK	START/STOP	HAND OFF AUTOMATIC	PILOT LIGHT	LOCATION	FURNISHED BY	INSTALLED BY	FUSED	NON FUSED	ENCLOSURE	REFERENCE NOTE(S)	UNIT NUMBER	ITEM NUMBER
1	AHU-1	AIR HANDLING UNIT	BUILDING EXTERIOR	22.9A	3	200		208	LP-3A	35A-3P	3-#8, PLUS 2ND., 3/4"C	INTEGRAL W/UNIT															AT UNIT 6	EC	EC			NEMA 3R		AHU-1	1
2	WH-1	WALL HEATER	CORRIDOR 109	2.0 KW	1	208		208	LP-3A	20A-2P	2-#12, PLUS 2ND., 3/4"C	INTEGRAL W/UNIT																					①	WH-1	2
3	WH-2	WALL HEATER	MEN'S TOIL./ SHOWER 108	2.5 KW	1	208		208	LP-3A	20A-2P	2-#12, PLUS 2ND., 3/4"C	INTEGRAL W/UNIT																					①	WH-2	3
4	WH-3	WALL HEATER	MEN'S TOIL./ SHOWER 108	2.0 KW	1	208		208	LP-3A	20A-2P	2-#12, PLUS 2ND., 3/4"C	INTEGRAL W/UNIT																					①	WH-3	4
5	WH-4	WALL HEATER	WOMEN'S TOIL./ SHOWER 107	3.0 KW	1	208		208	LP-3A	20A-2P	2-#12, PLUS 2ND., 3/4"C	INTEGRAL W/UNIT																					①	WH-4	5
6	WH-5	WALL HEATER	CORRIDOR 109	2.0 KW	1	208		208	LP-3A	20A-2P	2-#12, PLUS 2ND., 3/4"C	INTEGRAL W/UNIT																					①	WH-5	6
7	WH-6	WALL HEATER	MECH. ROOM 104	1.5 KW	1	208		208	LP-3A	20A-2P	2-#12, PLUS 2ND., 3/4"C	INTEGRAL W/UNIT																					①	WH-6	7
8	EH-1	EXHAUST HOOD	EMPLOYEE LOUNGE 105	F/HP	1	115		120	LP-3A	20A-1P	2-#12, PLUS 2ND., 3/4"C	INTEGRAL W/UNIT																						EH-1	8
9	ERV-1	ENERGY RECOVERY VENTILATOR	CORRIDOR 109	17.6A	1	115		120	LP-3A	30A-1P	2-#10, PLUS GND., 3/4"C	MECH. ROOM 104	HC	EC	●					●							AT UNIT 10	EC	EC				①	ERV-1	9
10	DH-1	DUCT HEATER	CORRIDOR 109	10.0 KW	3	200		208	LP-3A	40A-3P	3-#8, PLUS 2ND., 3/4"C	INTEGRAL W/UNIT																						DH-1	10
11	OHD-1	OVERHEAD DOOR	POLE BARN	1/2 HP	1	115		120	PB-1	20A-1P	2-#12, PLUS 2ND., 3/4"C																AT UNIT 10	EC	EC					OHD-1	11

GENERAL NOTES

1 UNLESS OTHERWISE NOTED, ALL CONTROL WIRING SHALL BE 120V. PROVIDE CONTROL TRANSFORMERS AS REQUIRED.

2 UNLESS OTHERWISE NOTED, ALL MAGNETIC CONTACTORS AND MOTOR CONTROLLERS SHALL BE COMPLETE WITH ONE SET OF N.O. AND N.C. AUXILIARY CONTACTS.

REFERENCE NOTES

① DISCONNECT FURNISHED INTEGRAL W/UNIT BY MANUFACTURER.

② ALL EQUIPMENT ITEMS SHOWN SHALL HOMERUN SEPARATELY TO POWER SOURCE INDICATED.

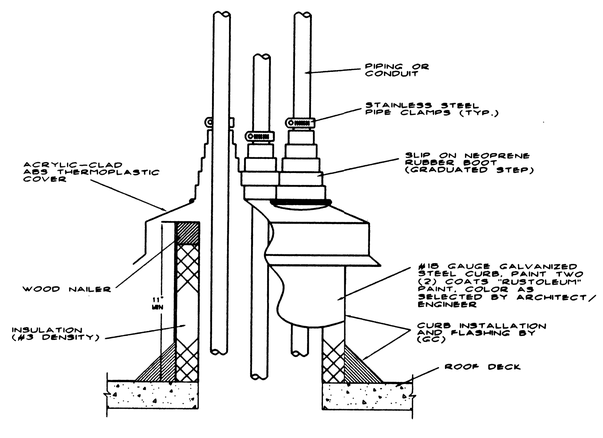

DETAIL— PIPING AND CONDUIT THRU ROOF

SCALE: NONE
(PATE MODEL #PCA-7 WITH #PCC-1, OR APPROVED EQUAL) FURNISHED/INSTALLED (BY HC). [TOTAL FIVE (5) REQUIRED]

REVISIONS

no.	date	description	by

It is a violation of the New York State education law for any person, unless acting under the directions of a licensed, registered architect, to alter in any way, an item bearing his seal.

title VIII, part 68, 29.b)

e-c engineering, pllc
425 EAST WILLOW STREET
SYRACUSE, NEW YORK 13203
(315) 422-1179
E1-44

STATE OF NEW YORK · NORTON S. NOWAK · LICENSED PROFESSIONAL ENGINEER · 067313

GARAGE MODIFICATIONS AT:
MEADOWBROOK-LIMESTONE WASTEWATER TREATMENT PLANT
TOWN OF MANLIUS — MANLIUS, NEW YORK
FTLA/GST • FTLA/GOLA / ARCHITECTS — STRATOTECH • UTICA

sheet title
EQUIPMENT WIRING SCHEDULE

drawn: EDZ
checked: RN
date: 4/3/00
file no.: 99001.73
sheet no.: **ME-1**

ELECTRICAL LEGEND

NEW	EXISTING	
		NEW
		EXISTING
		EXISTING TO BE REMOVED (INCLUDING ASSOCIATED WIRE/CONDUIT UNLESS OTHERWISE NOTED)
		INCANDESCENT LUMINAIRE, CEILING–LETTER INDICATES TYPE
C		FLUORESCENT LUMINAIRE–NOMINAL 1' WIDE OR SMALLER–LETTER INDICATES TYPE
×2		EXIT LIGHT, WALL–LETTER INDICATES TYPE, BARS INDICATED FACE
S	S	SINGLE–POLE SWITCH
S_3	S_3	THREE–WAY SWITCH
		DUPLEX CONVENIENCE RECEPTACLE, WALL
(T)		DUPLEX CONVENIENCE RECEPTACLE, WALL, TRANSIENT VOLTAGE SURGE SUPPRESSOR (TVSS) TYPE
°		SPECIAL PURPOSE RECEPTACLE–LETTER INDICATES TYPE
		DUPLEX CONVENIENCE RECEPTACLE, WALL GROUND FAULT INTERRUPTER TYPE
J	J	JUNCTION BOX, CEILING
J	J	JUNCTION BOX, WALL
M 2		MOTOR, NUMBER INDICATES ITEM ON SCHEDULE
3	3	REFERS TO NOTE
		HOMERUN TO PANEL–NUMBER OF ARROWS INDICATES NUMBER OF CIRCUITS, MINIMUM #12 WIRE IN 1/2" CONDUIT UNLESS OTHERWISE SHOWN
		BRANCH CIRCUIT WIRING, WIRE SIZE SAME AS ASSOCIATED HOMERUN UNLESS OTHERWISE SHOWN.
		DISCONNECT SWITCH
		PANELBOARD (UNDER 250V)
		PANELBOARD (OVER 250V)
		TELEPHONE OUTLET, WALL–INSIDE SYSTEM
		DATA OUTLET, WALL–INSIDE SYSTEM
		EMERGENCY LIGHTING SYSTEM BATTERY UNIT WITH INTEGRAL LIGHTING HEADS
2		EMERGENCY LIGHTING SYSTEM REMOTE LIGHTING HEAD
(EHB)		ELECTRIC HYDRONIC BASEBOARD RADIATION BY (HC)
EM	EM	EMERGENCY CIRCUIT, LUMINAIRE, DEVICE
WP	WP	WEATHERPROOF DEVICE
AC	AC	ABOVE COUNTER
AFF	AFF	ABOVE FINISHED FLOOR
AFG	AFG	ABOVE FINISHED GRADE
GFI	GFI	GROUND FAULT INTERRUPTER
(EWC)	(EWC)	ELECTRIC WATER COOLER
(EC)	(EC)	ELECTRICAL CONTRACTOR
(GC)	(GC)	GENERAL CONTRACTOR
(HC)	(HC)	HVAC CONTRACTOR
(PC)	(PC)	PLUMBING CONTRACTOR
UE		UNDERGROUND ELECTRIC SERVICE

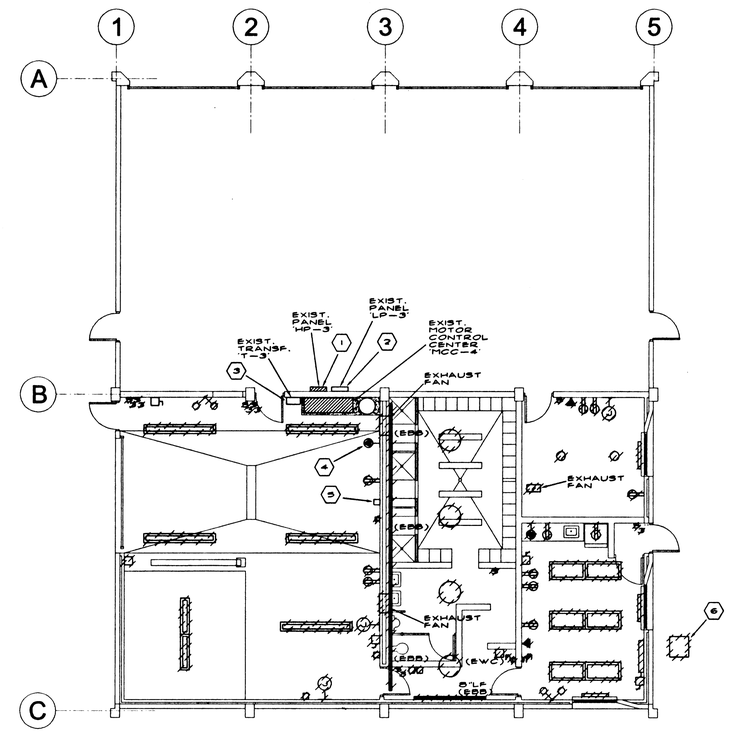

NORTH

EXISTING FLOOR PLAN

SCALE: 1/8"=1'-0"

NOTE: CONTRACTOR SHALL RE-ENERGIZE EXISTING TO REMAIN BRANCH CIRCUITS THAT HAVE BEEN INTERRUPTED AS RESULT OF REMOVALS SHOWN.

ELECTRICAL NOTES

1. EXISTING PANEL 'HP-3'; WESTINGHOUSE, 277–480V/3Ø/4W, 225 AMP M.L.O., (BRANCH BREAKERS AS FOLLOWS):
   (1) 30A–3P (ACTIVE)
   (3) 30A–1P (ACTIVE)
   (5) 30A–3P (SPARE)
   (7) 1P (SPACES)
2. EXISTING PANEL 'LP-3'; WESTINGHOUSE, 120–208V/3Ø/4W, 100 AMP M.L.O., (BRANCH BREAKERS AS FOLLOWS):
   (1) 50A–2P (ACTIVE)
   (6) 20A–1P (ACTIVE)
   (7) 1P (SPACES)
3. EXISTING TRANSFORMER 'T-3'; WESTINGHOUSE, TYPE 'EPT', 480V–120/208V/3Ø/4W, RELOCATE TO NEW LOCATION SHOWN DWG. E-2. (REFER TO NOTE 1, DWG. E-2).
4. RELOCATE EXISTING 50A–2P SPECIAL PURPOSE RECEPTACLE (WELDER) TO NEW LOCATION SHOWN DWG. E-2. (REFER TO NOTE 2, DWG. E-2).
5. RELOCATE EXISTING WELDER EXHAUST FAN STARTER TO NEW LOCATION SHOWN DWG. E-2. (REFER TO NOTE 3, DWG. E-2).
6. REMOVE ALL EXISTING WIRE/CONDUIT SERVING EXISTING CONDENSING UNIT BACK TO SOURCE.

no.	date	description	by

REVISIONS

It is a violation of the New York State education law for any person, unless acting under the direction of a licensed, registered architect, to alter an item on this document in any way.

title VIII, part 68, 5(b)

e-L engineering, pc
425 EAST WILLOW STREET
MOUNT VERNON, NEW YORK 10553
(914) 420-1179
E-414

STATE OF NEW YORK · EDWARD DONOVAN · LICENSED PROFESSIONAL ENGINEER · 069310

GARAGE MODIFICATIONS AT:
MEADOWBROOK-LIMESTONE WASTEWATER TREATMENT PLANT

TOWN OF MANLIUS
MANLIUS, NEW YORK

POLLIONI • FRAGOLA / ARCHITECTS
SYRACUSE • UTICA

sheet title
EXISTING FLOOR PLAN

drawn	EDZ
checked	RN
date	4/3/00
file no.	99001.73
sheet no.	E-1

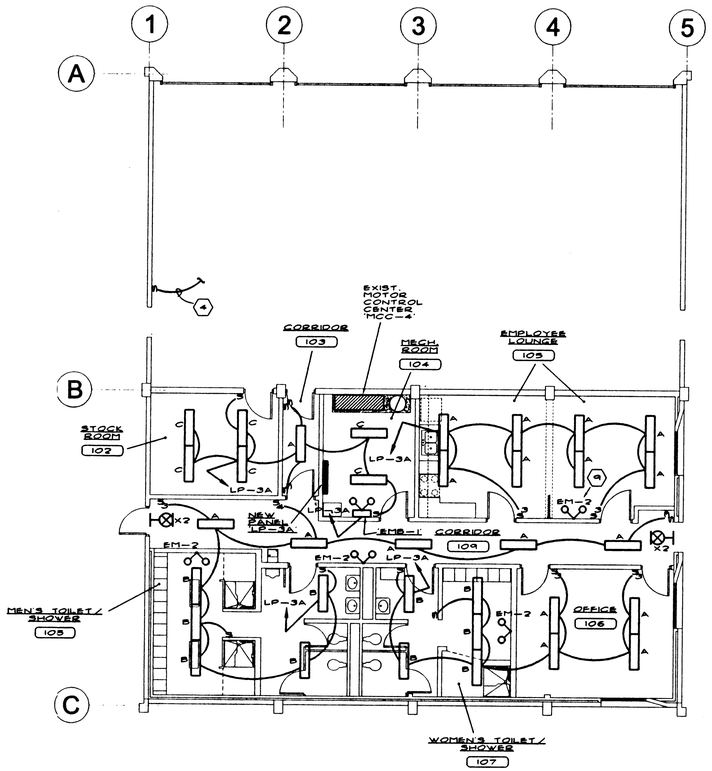

NORTH

PROPOSED FLOOR PLAN (LIGHTING)

SCALE: 1/8"=1'-0"

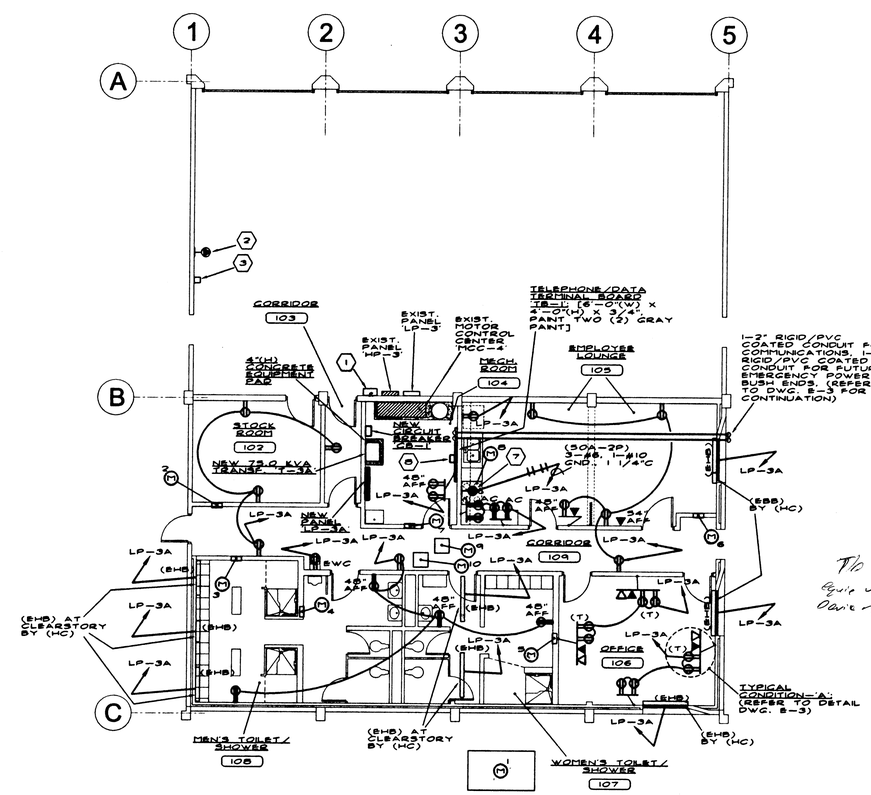

NORTH

PROPOSED FLOOR PLAN (POWER)

SCALE: 1/8"=1'-0"

Disconnects at ME-1

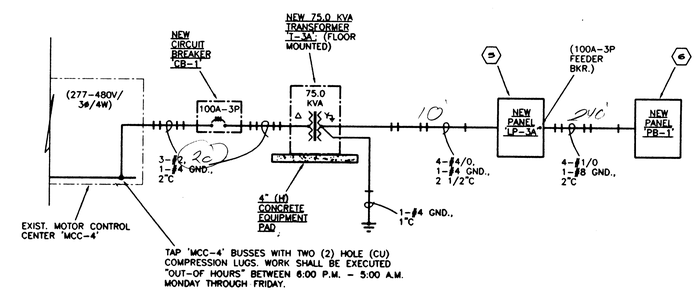

PROPOSED PARTIAL ONE LINE POWER DIAGRAM

SCALE: NONE

ELECTRICAL NOTES

1. EXISTING/RELOCATED TRANSFORMER 'T-3'. EXTEND WITH 3-#6, PLUS GND., ¾"C ON PRIMARY SIDE, AND 4-#4, PLUS GND., 1½"C ON SECONDARY SIDE TO NEW LOCATION SHOWN. WIRE COMPLETE. (REFER TO NOTE 3, DWG. E-1).
2. EXISTING/RELOCATED 30A-2P SPECIAL PURPOSE RECEPTACLE (WELDER). EXTEND WITH 2-#6, 1-#10 GND., ¾"C TO NEW LOCATION SHOWN. WIRE COMPLETE. (REFER TO NOTE 4, DWG. E-1).
3. EXISTING/RELOCATED WELDER EXHAUST FAN STARTER. EXTEND EXISTING WIRE/CONDUIT WITH NEW, TO NEW LOCATION SHOWN. WIRE COMPLETE. (REFER TO NOTE 3, DWG. E-1).
4. EXISTING/RELOCATED WELDER EXHAUST HOOD LUMINAIRES. HOMERUN WITH 2-#12, PLUS GND., 1/2"C TO 20A-1P BREAKER IN NEW PANEL 'PP-1'.
5. NEW PANEL 'PP-1'. 120-208V/3ø/4W, WITH GROUND BUS. SURFACE MOUNTED. 225 AMP MAINS. 225A-3P M.C.B., TWO (2) ENCLOSURES AT (30) POLES. 22 KA R.M.S. SYM. DUTY. (BRANCH BREAKERS AS FOLLOWS):

   (1) 100A-3P (ACTIVE)
   (1) 40A-3P (ACTIVE)
   (1) 35A-3P (ACTIVE)
   (1) 50A-2P (ACTIVE)
   (6) 20A-2P (ACTIVE)
   (1) 30A-1P (ACTIVE)
   (23) 20A-1P (ACTIVE)
   (3) 20A-1P (SPARES)
   (8) 1P (SPACES)
6. NEW PANEL 'PB-1'. 120-208V/3ø/4W, WITH GROUND BUS. SURFACE MOUNTED. 100 AMP MAINS. 100A-3P M.C.B., ONE (1) ENCLOSURE AT (20) POLES. 22 KA R.M.S. SYM. DUTY. (BRANCH BREAKERS AS FOLLOWS):

   (4) 20A-1P (ACTIVE)
   (5) 20A-1P (SPARES)
   (11) 1P (SPACES)
7. SPECIAL PURPOSE RECEPTACLE TYPE 'A' (RANGE). 50 AMPERES, 125-250 V.A.C./ 3-POLE/4W. SIMILAR TO PASS & SEYMOUR #3934, AND WALL PLATE #S-716. CONFIRM EXACT REQUIREMENTS WITH OWNER PRIOR TO INSTALLATION.
8. PROVIDE ONE (1) 12-PORT CATEGORY 3 DATA PATCH PANEL BY HUBBELL #HPW3FA12A, OR EQUAL BY LEVITON, OR ORTRONICS.
9. HOMERUN ALL EMERGENCY LIGHTING EM-2 REMOTE UNITS TO EMERGENCY LIGHTING BATTERY UNIT 'EMB-1'. (REFER TO SPECIFICATION SECTION 16620, ARTICLE 3.02).

no.	date	revisions descriptions	by

It is a violation of the law for any person, unless acting under the direction of a licensed, registered professional engineer, to alter in any way, this document. title VIII, part 69, 7209

e-c engineering, pc
425 EAST WILLOW STREET
SYRACUSE, NEW YORK 13203
(315) 422-1179
E-424

STATE OF NEW YORK · ERIC SCHRAM · 071333 · LICENSED PROFESSIONAL ENGINEER

GARAGE MODIFICATIONS AT:
MEADOWBROOK-LIMESTONE WASTEWATER TREATMENT PLANT
MANLIUS, NEW YORK

TOWN OF MANLIUS
FTG/GOSS • FTG/GOSS / ARCHITECTS
STRAC/CORE • UTICA

sheet title
PROPOSED FLOOR PLAN (LIGHTING / POWER)

drawn	EDZ
checked	RN
date	4/3/00
file no.	99001.73
sheet no.	E-2

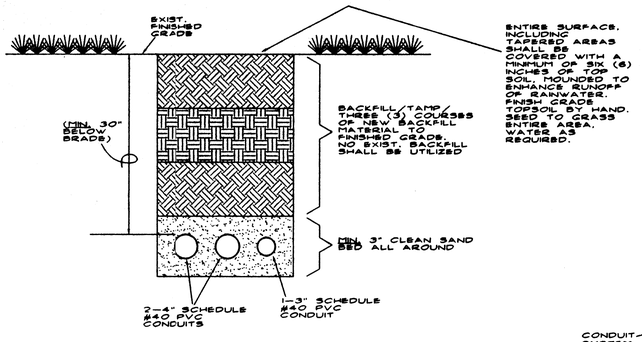

DETAIL— NEW UNDERGROUND CONDUITS

SCALE: NONE

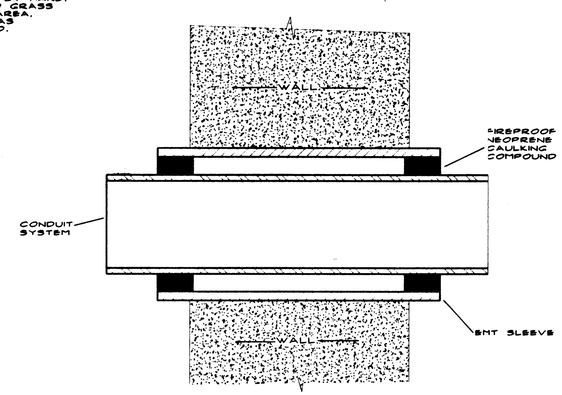

CONDUIT SLEEVE ABOVE GRADE

SCALE: NONE

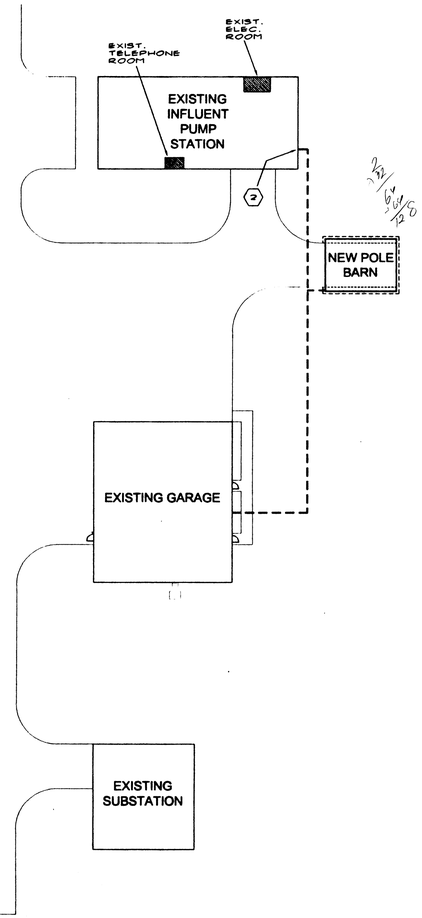

NORTH

PROPOSED SITE PLAN

SCALE: 1/32"=1'-0"

ELECTRICAL NOTES

1. 4-#1/0, 1-#8 GND., 2"C TO 100A-3P FEEDER BREAKER IN NEW PANEL 'LP-3A'.
2. EXTEND 1-50 PAIR TELEPHONE EXCHANGE CABLE IN 1-2" RIGID/PVC COATED CONDUIT, (COMMUNICATIONS), AND 1-2" RIGID/PVC COATED CONDUIT, (FUTURE EMERGENCY POWER), TO EXISTING TELEPHONE ROOM, AND EXISTING ELECTRIC ROOM RESPECTIVELY. BUSH ENDS. (BC) SHALL FIELD VERIFY EXACT ROUTING PRIOR TO START OF WORK SHOWN.

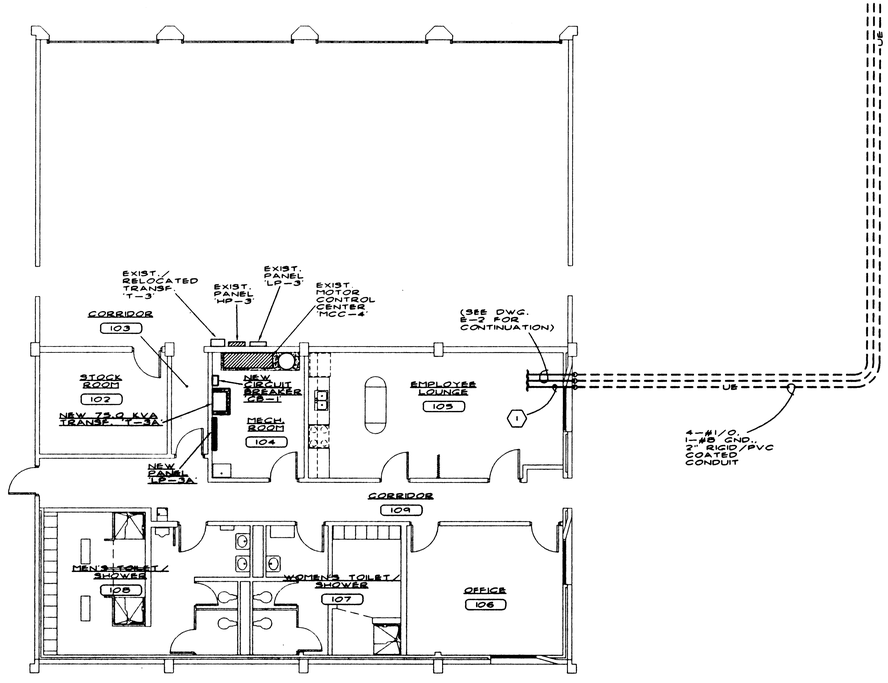

1-50 PAIR TELEPHONE EXCHANGE CABLE IN 1-2" RIGID/PVC COATED CONDUIT FOR COMMUNICATIONS. BUSH END. (FOR CONTINUATION SEE SITE PLAN THIS DWG)

1-2" RIGID/PVC COATED CONDUIT FOR FUTURE EMERGENCY POWER. BUSH ENDS. (FOR CONTINUATION SEE SITE PLAN THIS DWG.)

NEW PANEL 'LP-3A'

UB

4-#1/0, 1-#8 GND., 2" RIGID/PVC COATED CONDUIT

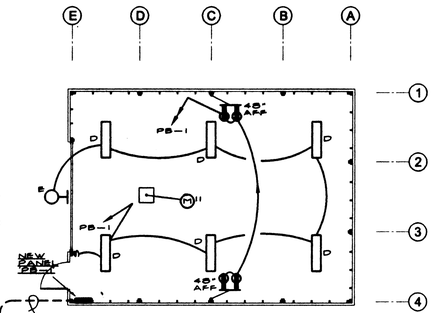

NORTH

PROPOSED POLE BARN FLOOR PLAN (LIGHTING/POWER)

SCALE: 1/4"=1'-0"

(BC) SHALL FURNISH/INSTALL 3-PAIR, CATEGORY NO. 3 TELEPHONE CABLE, AND 4-PAIR ENHANCED CATEGORY NO. 5 DATA CABLE. HOMERUN ALL CABLES TO TELEPHONE/DATA TERMINAL BOARD 'TB-1'. ALL CABLES SHALL BE PLENUM RATED TYPE. CATEGORY NO. 3 TELEPHONE CABLE SHALL BE WESTPENN #WP54534, OR EQUAL BY BELDEN, OR COLUMBIA. ENHANCED CATEGORY NO. 5 DATA CABLE SHALL BE WESTPENN #WP56471, OR EQUAL BY BELDEN, OR COLUMBIA.

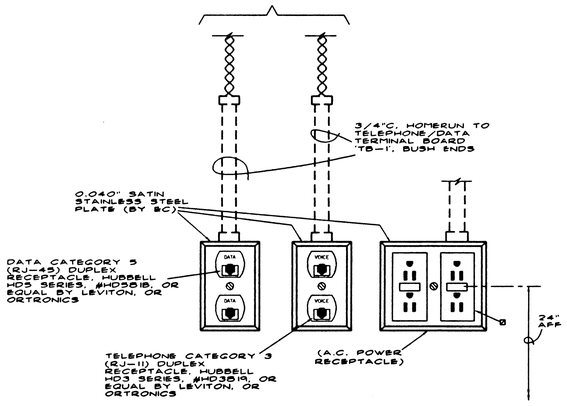

Ø DUPLEX CONVENIENCE RECEPTACLE SHALL BE TRANSIENT VOLTAGE SURGE SUPPRESSOR (TVSS) TYPE P. & S. #6362-GRYSP, OR EQUAL

TYPICAL CONDITION 'A'

SCALE: NONE

(TYPICAL THREE (3) LOCATIONS)

no.	date	description	by

REVISIONS

It is a violation of the New York State education law for any person, unless acting under the direction of a licensed, registered or certified professional, to alter in any way, items on this document.
title TITLE, part 69, 7209

e-c engineering, pc
422 EAST WILLOW STREET
SYRACUSE, NEW YORK 13203
(315) 422-1179
E-44

STATE OF NEW YORK · MARK A. CUNNINGHAM · 073393 · LICENSED PROFESSIONAL ENGINEER

GARAGE MODIFICATIONS AT:
MEADOWBROOK-LIMESTONE WASTEWATER TREATMENT PLANT
TOWN OF MANLIUS · MANLIUS, NEW YORK
ENGINEERS • PLANNERS • LANDSCAPE ARCHITECTS · OFFICES

sheet title
PROPOSED POLE BARN FLOOR PLAN (LIGHTING / POWER) / DETAILS

drawn	EDZ
checked	RN
date	4/3/00
file no.	99001.73
sheet no.	E-3