GROUND CONDUCTOR SCHEDULE

RATING OR SETTING OF AUTOMATIC OVERCURRENT DEVICE IN CIRCUIT	GROUND WIRE SIZE (COPPER)
15	14
20	12
30	10
40	10
50	10
60	10
70	8
90	8
100	8
200	6
400	2
600	1
800	0
1000	2/0
1200	3/0
1600	4/0

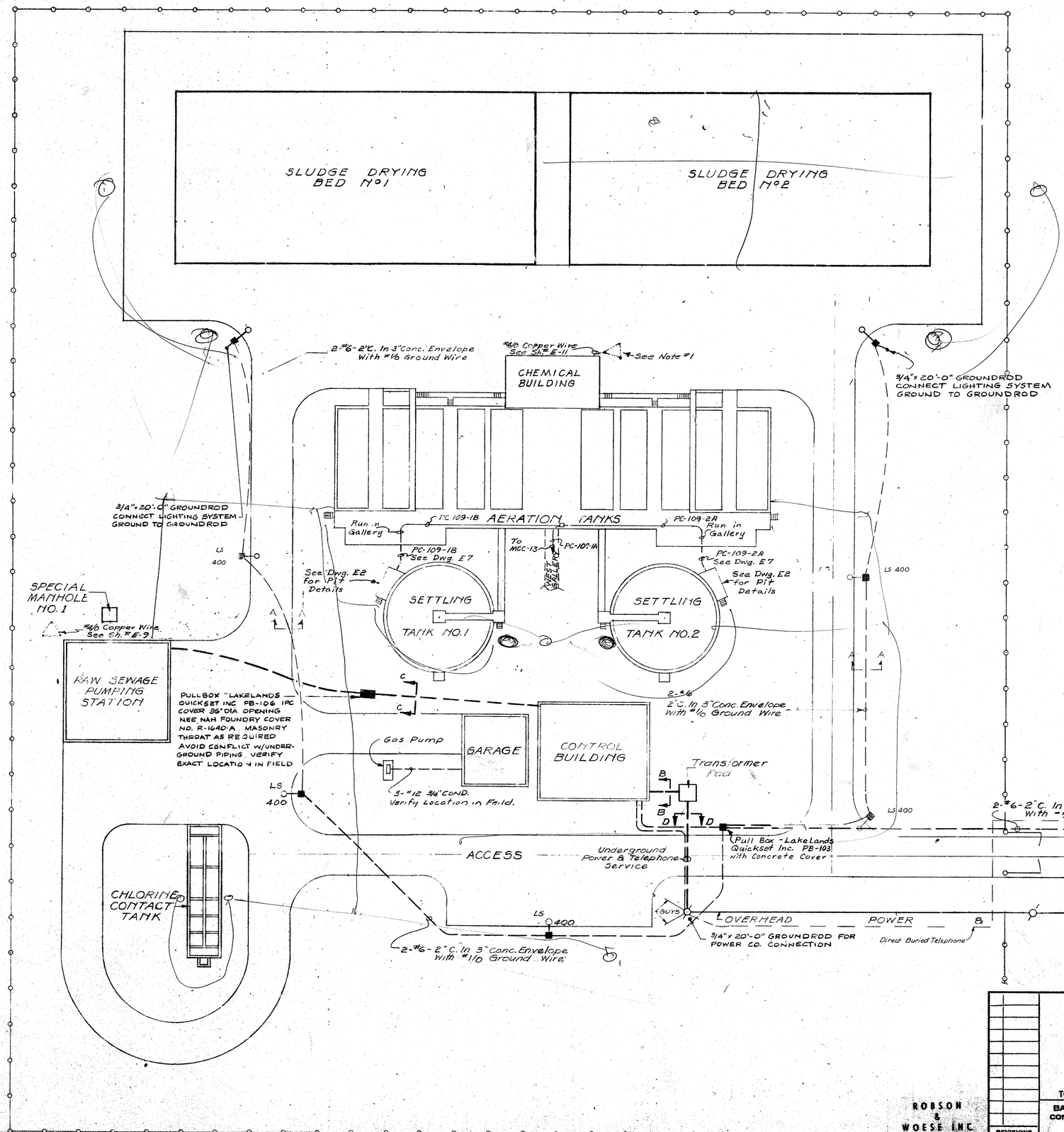

Notes:

1. Typ. Ground Grid consists of (3) 3/4"x 20'-0" Grd. Rods on 10'-0" spacing connected by #4/0 Copper Wire to MCC's Grd. Busses.

2 See Sheet E-2 For Sections

IN CHARGE OF: F.A.L
DESIGNED BY: W.K.
DRAWN BY: J.R.S.
CHECKED BY: W.K.

ROBSON & WOESE INC.

REVISIONS

ONONDAGA COUNTY DEPARTMENT OF PUBLIC WORKS
DIVISION OF DRAINAGE AND SANITATION

BREWERTON WATER POLLUTION CONTROL PLANT

SITE PLAN

ELECTRICAL

TOWN OF CICERO ONONDAGA CO., N.Y.

BARTON, BROWN, CLYDE & LOGUIDICE
CONSULTING ENGINEERS & LAND SURVEYORS
NORTH SYRACUSE, NEW YORK

DATE: FEBRUARY 1975
SCALE: 1" = 30'
FILE NO.: 55.32-95F

E-1

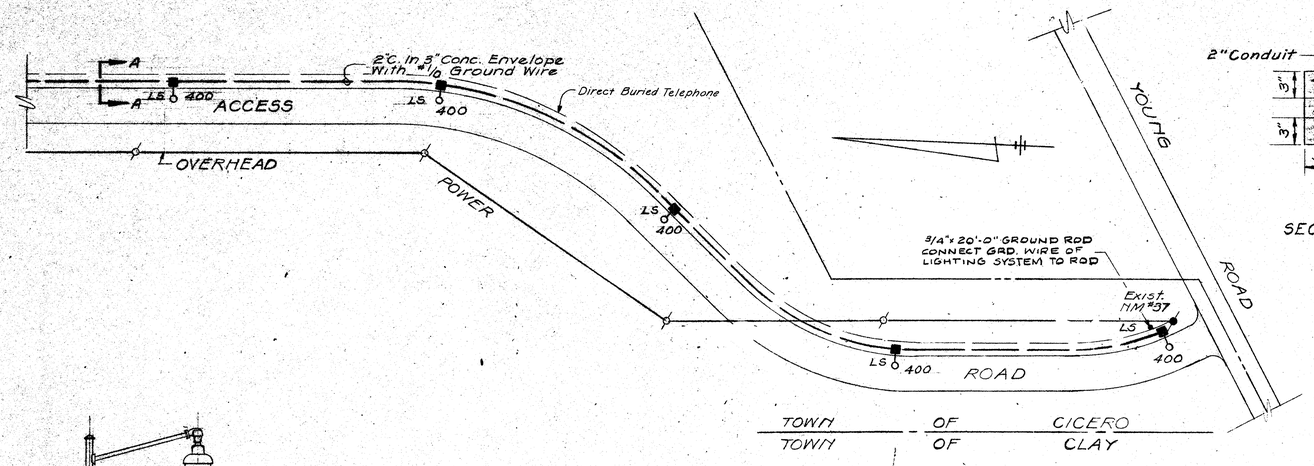

SITE PLAN
Scale: 1" = 50'

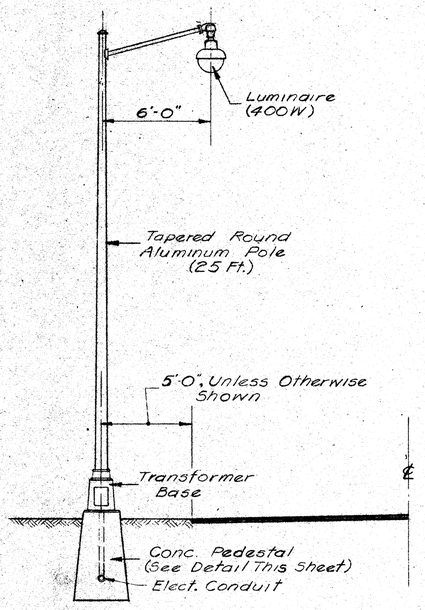

STREET LIGHT DETAILS
Scale: 1/4" = 1'-0"

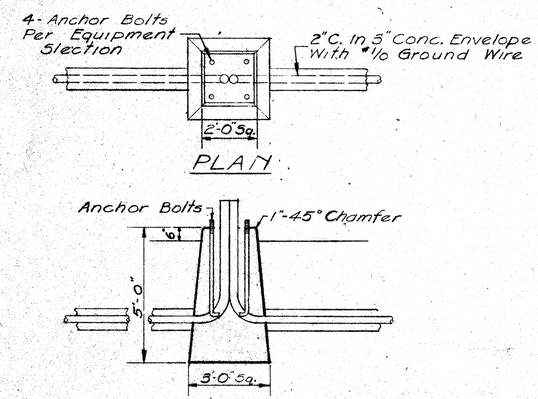

CONCRETE PEDESTAL DET.
Scale: 3/8" = 1'-0"

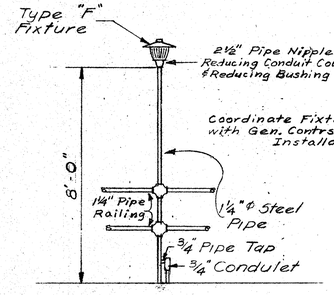

Type "F" Fixture @ Settling Tank MOUNTING DETAIL
Scale: 3/8" = 1'-0"

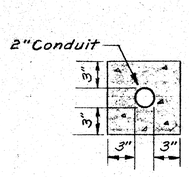

SECTION A-A

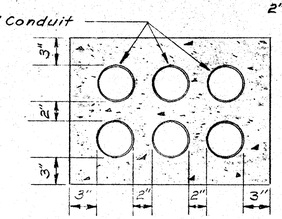

SECTION B-B

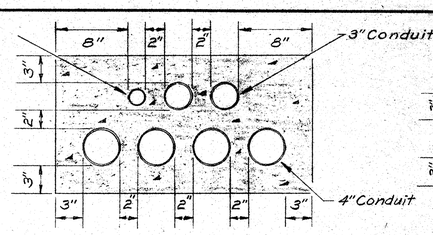

SECTION C-C

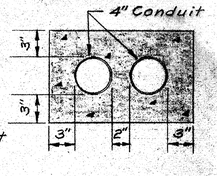

SECTION D-D

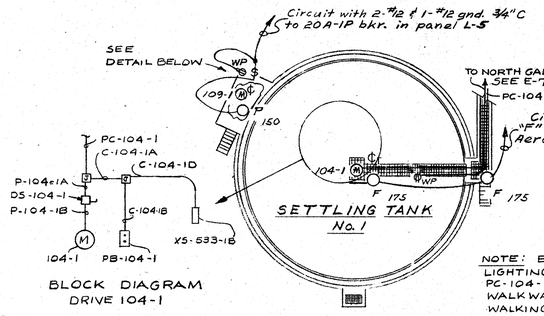

BLOCK DIAGRAM
DRIVE 104-1

NOTE: ELECT. CONT'R TO RUN LIGHTING CONDUIT, RECEPT., AND PC-104-1 & PC-104-2 ALONG WALKWAY. ROUTE TO AVOID WALKING INTERFERENCE AND MECH. EQUIPMENT.

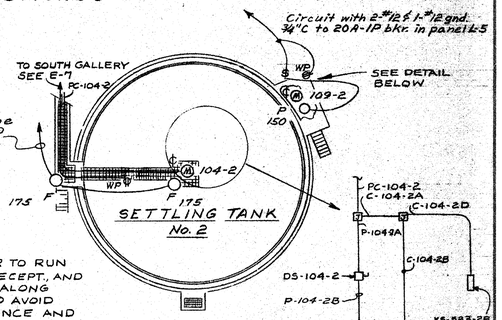

BLOCK DIAGRAM
DRIVE 104-2

PLAN
SETTLING TANKS
No Scale

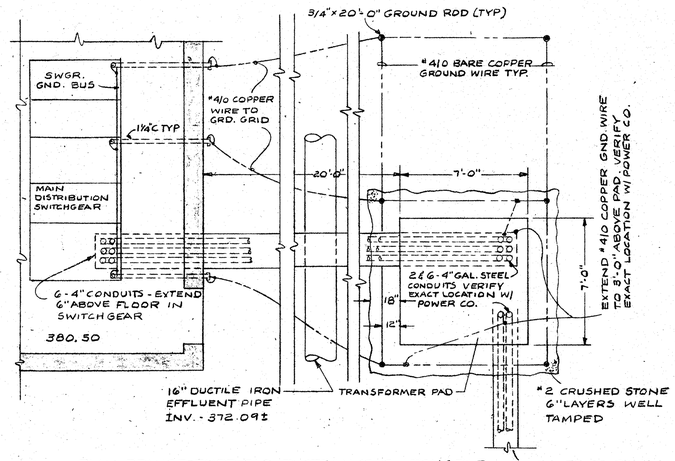

PLAN - TRANSFORMER PAD, DUCTBANKS, SWITCHGEAR
SCALE: 1/4" = 1'-0"

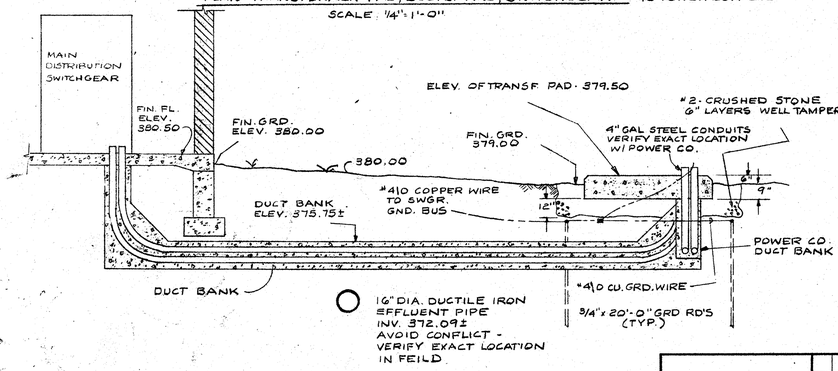

ELEV. TRANSFORMER PAD, DUCTBANKS & SWITCHGEAR
SCALE: 1/4" = 1'-0"

NOTE: ALL ELBOWS SHALL BE 42" RADIUS

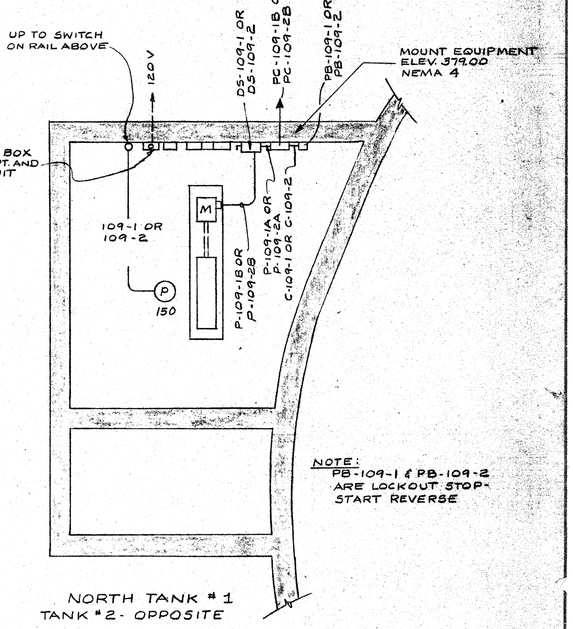

NOTE: PB-109-1 & PB-109-2 ARE LOCKOUT STOP-START REVERSE

NORTH TANK #1
TANK #2 - OPPOSITE

IN CHARGE OF: F.A.L.
DESIGNED BY: W.K.
DRAWN BY: F.N.K., J.R.S.
CHECKED BY: W.K.

ROBSON & WOESE INC.

REVISIONS

ONONDAGA COUNTY DEPARTMENT OF PUBLIC WORKS
DIVISION OF DRAINAGE AND SANITATION

BREWERTON WATER POLLUTION CONTROL PLANT

MISCELLANEOUS DETAILS

ELECTRICAL

TOWN OF CICERO ONONDAGA CO., N. Y.

BARTON, BROWN, CLYDE & LOGUIDICE
CONSULTING ENGINEERS & LAND SURVEYORS
NORTH SYRACUSE, NEW YORK

DATE: FEBRUARY 1975
SCALE: AS SHOWN
FILE NO.: 55.32-96F

E-2

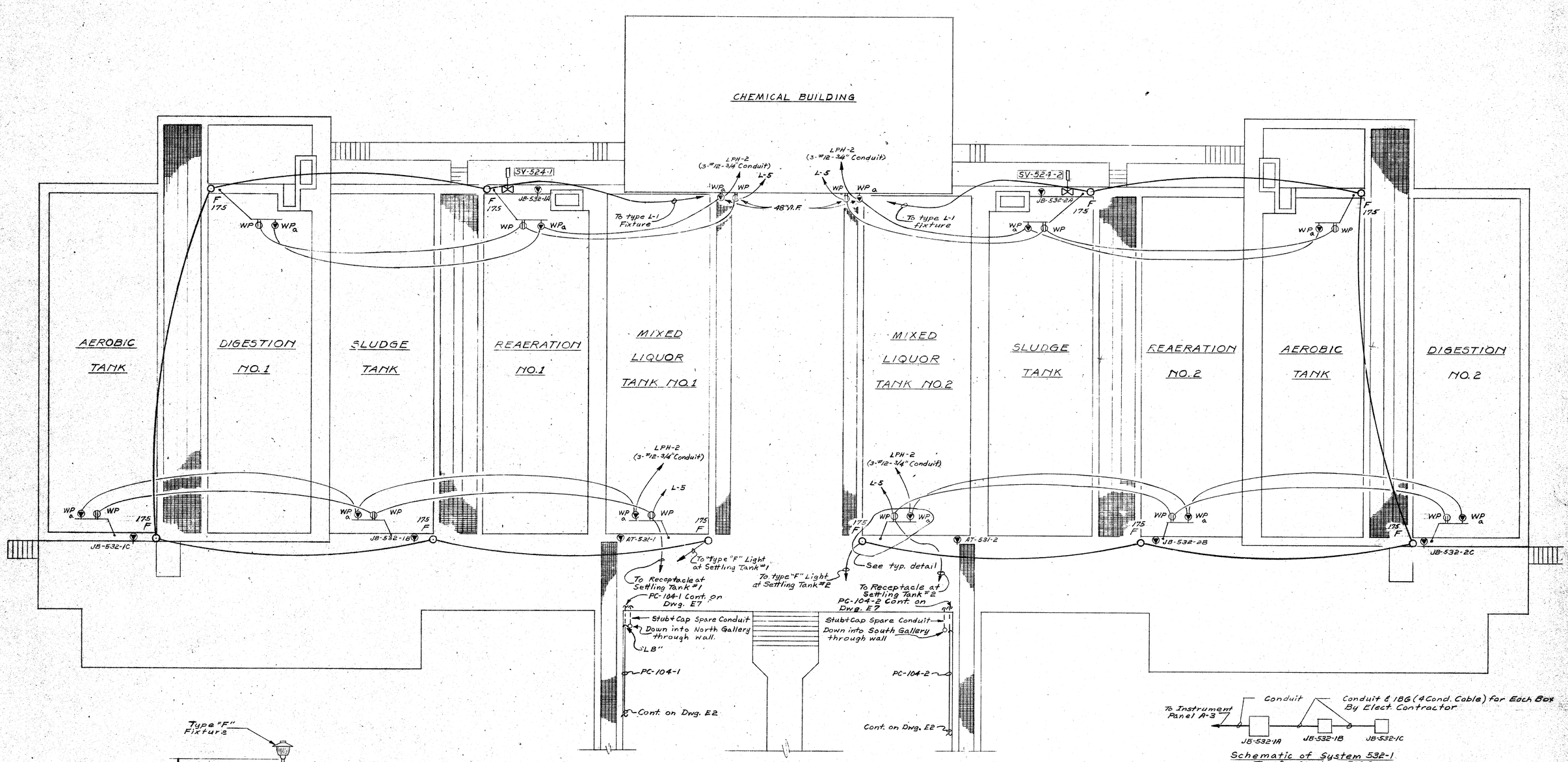

TOP PLAN
Scale: 1/8"=1'-0"

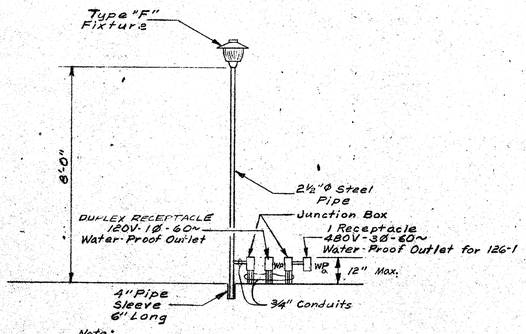

Note:
Provide suitable corrosion resistant angle iron support for junction and outlet boxes.

Type "F" Fixture & Power Outlet
Typ. Detail
No Scale

Schematic of System 532-1
Typ. for System 532-2

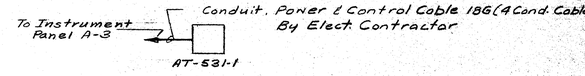

Schematic of System 531-1
Typ. for System 531-2

Note:
Conduit size to be determined by Equipment Supplier.

IN CHARGE OF: F.A.L
DESIGNED BY: W.K.
DRAWN BY: F.N.K, J.R.S.
CHECKED BY: W.K.

ROBSON & WOESE INC.
CONSULTING ENGINEERS
SYRACUSE NEW YORK

REVISIONS

ONONDAGA COUNTY DEPARTMENT OF PUBLIC WORKS
DIVISION OF DRAINAGE AND SANITATION
BREWERTON WATER POLLUTION CONTROL PLANT
AERATION TANKS
ELECTRICAL
TOWN OF CICERO ONONDAGA CO., N.Y.

BARTON, BROWN, CLYDE & LOGUIDICE
CONSULTING ENGINEERS & LAND SURVEYORS
NORTH SYRACUSE, NEW YORK

DATE: FEBRUARY 1975
SCALE: AS SHOWN
FILE NO.: 55.32-97F

E-3

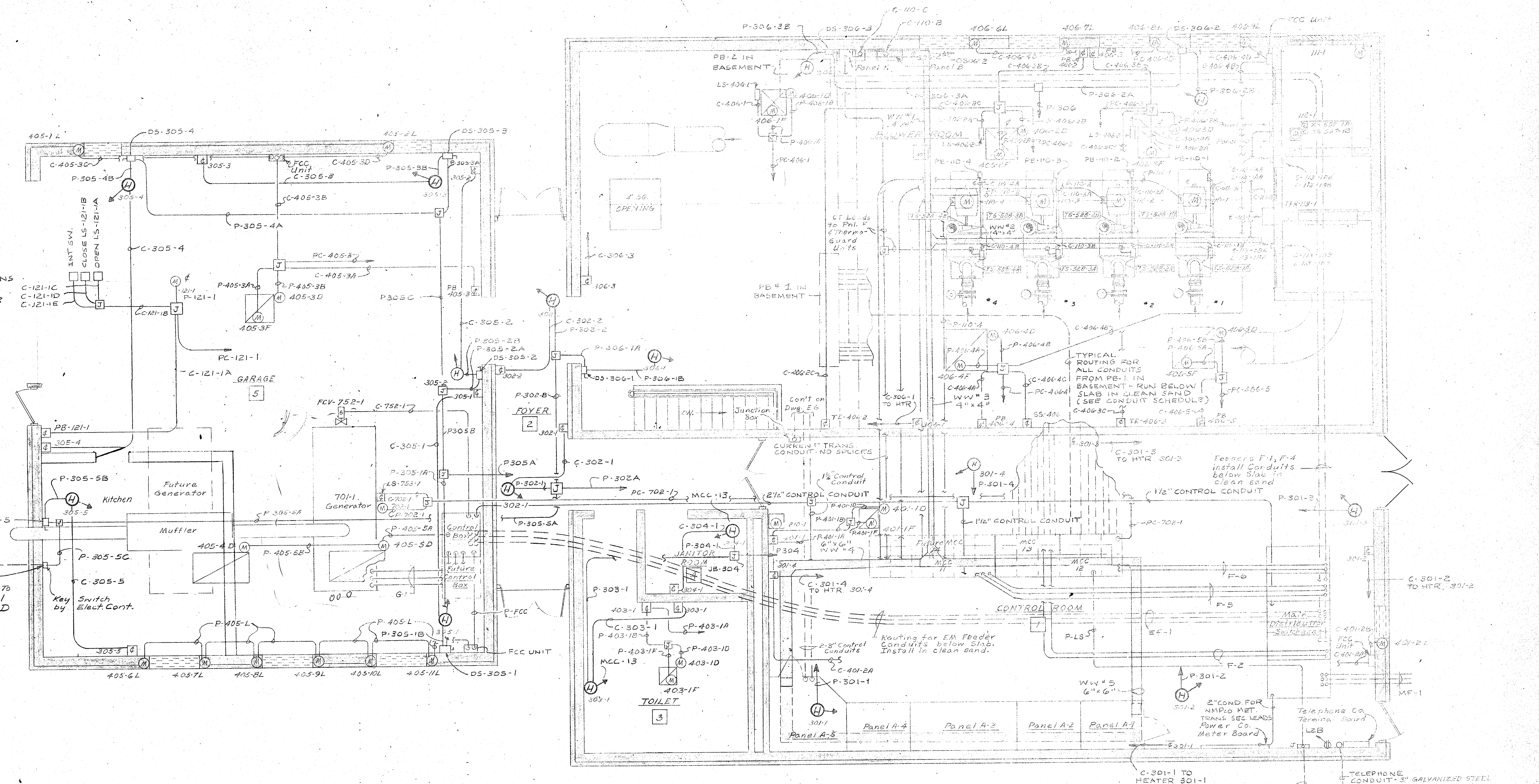

NOTE:

1. INSTALL 25% SPARE CONDUITS BETWEEN MCC's & PB#1.
2. DO NOT GROUND GENERATOR NEUTRAL AT GENERATOR NEUTRAL SHALL BE CARRIED BACK TO SWGR. & TIED TO SWGR. NEUTRAL BUS.

IN CHARGE OF: F.A.L.
DESIGNED BY: W.K.
DRAWN BY: J.P.S., B.C.R.
CHECKED BY: W.K.

ROBSON & WOESE INC.
CONSULTING ENGINEERS
SYRACUSE NEW YORK

REVISIONS

ONONDAGA COUNTY DEPARTMENT OF PUBLIC WORKS
DIVISION OF DRAINAGE AND SANITATION

BREWERTON WATER POLLUTION CONTROL PLANT

CONTROL BUILDING
ELECTRICAL

TOWN OF CICERO ONONDAGA CO., N.Y.

BARTON, BROWN, CLYDE & LOGUIDICE
CONSULTING ENGINEERS & LAND SURVEYORS
NORTH SYRACUSE, NEW YORK

DATE: FEBRUARY 1975
SCALE: ¼"=1'-0"
FILE NO.: 55.32-98F

E-4

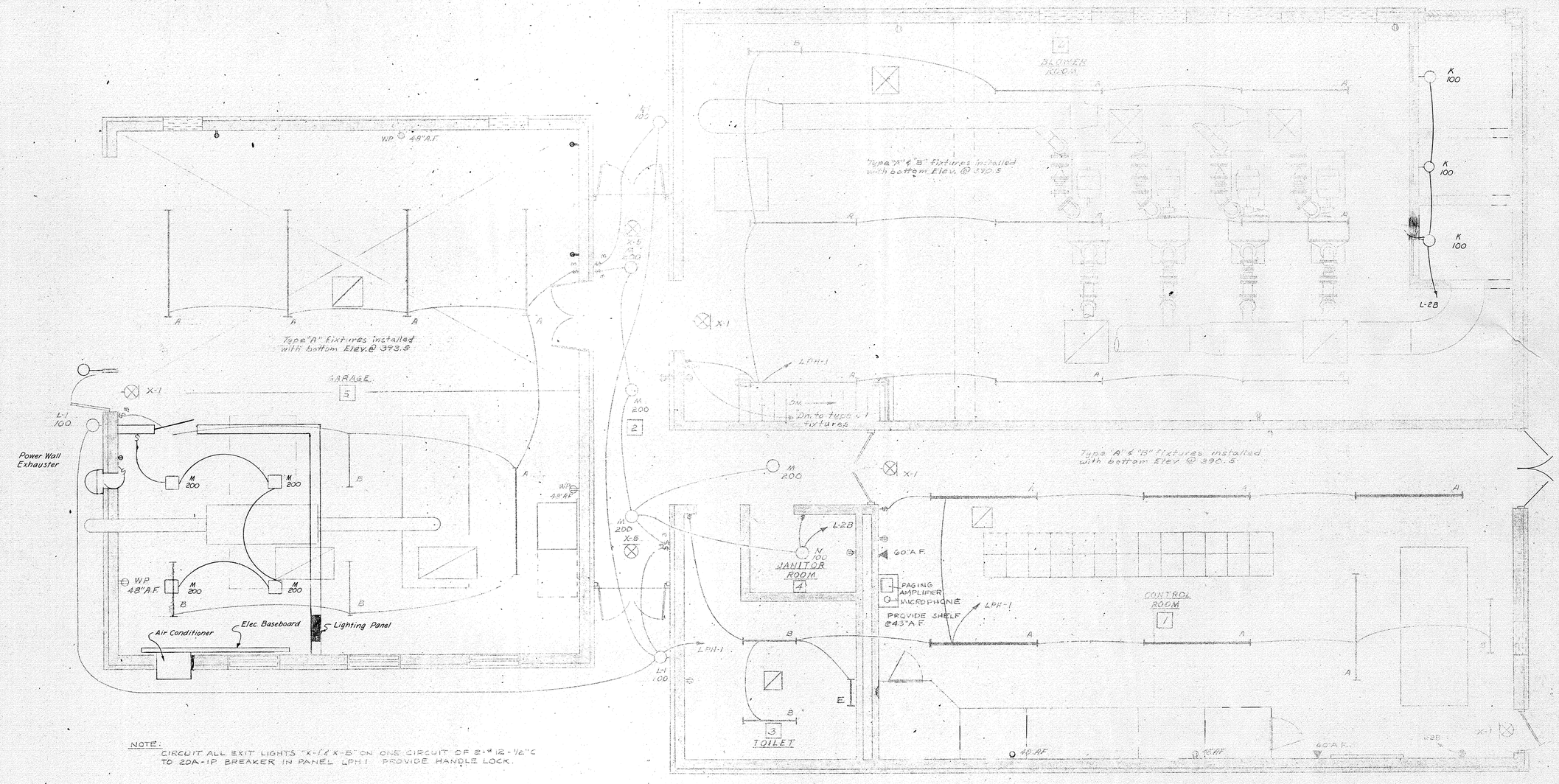

NOTE:
CIRCUIT ALL EXIT LIGHTS "X-1 & X-5" ON ONE CIRCUIT OF 2-#12-1/2"C TO 20A-1P BREAKER IN PANEL LPH 1. PROVIDE HANDLE LOCK.

Note:
Verify exact location of fixtures with Engineers prior to installation to avoid conflict with equipment installed by others.

IN CHARGE OF: F.A.L
DESIGNED BY: W.K.
DRAWN BY: J.P.S., S.C.R.
CHECKED BY: W.K.

ROBSON & WOESE INC.
CONSULTING ENGINEERS
SYRACUSE NEW YORK

REVISIONS

ONONDAGA COUNTY DEPARTMENT OF PUBLIC WORKS
DIVISION OF DRAINAGE AND SANITATION
BREWERTON WATER POLLUTION CONTROL PLANT

CONTROL BUILDING - LIGHTING
ELECTRICAL

TOWN OF CICERO ONONDAGA CO., N.Y.

BARTON, BROWN, CLYDE & LOGUIDICE
CONSULTING ENGINEERS & LAND SURVEYORS
NORTH SYRACUSE, NEW YORK

DATE: FEBRUARY 1975
SCALE: 1/4" = 1'-0"
FILE NO: 55 32 - 99F

E-5

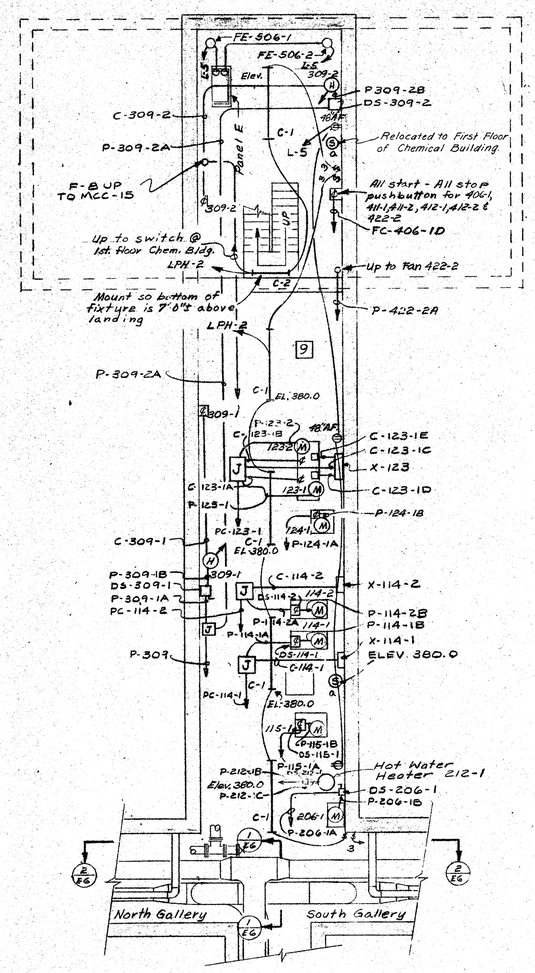

PLAN
EAST GALLERY
Scale: 1/8"=1'-0"

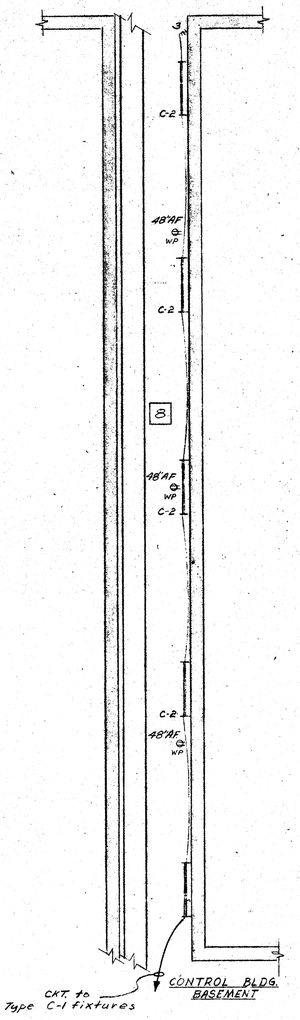

PLAN
WEST GALLERY
Scale: 1/8"=1'-1"

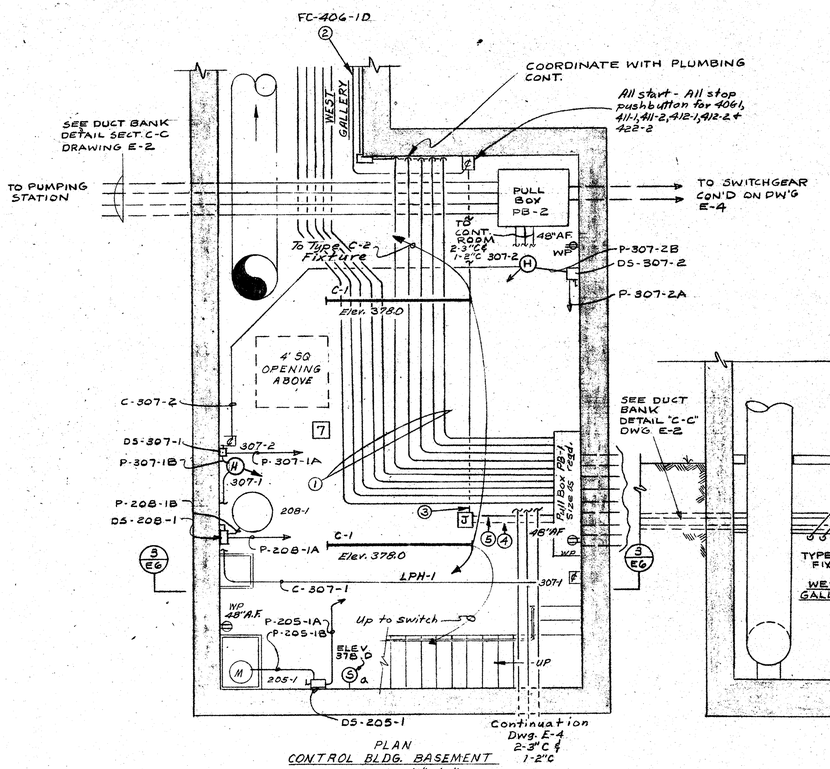

PLAN
CONTROL BLDG. BASEMENT
Scale: 1/4"=1'-0"

SECTION (3/E-6)

Notes:

1. CONDUIT ROUTINGS SHOWN ARE TYPICAL ONLY FOR FEEDERS AND CONTROL CIRCUITS. VERIFY EXACT QUANTITIES FROM ELECTRICAL EQUIPMENT AND CONTROL SCHEDULE, CONDUIT SCHEDULE, ETC.
2. 18-#12-1½" CONDUIT, CIRCUIT TO "ALL START-ALL STOP" PUSH BUTTON IN EAST GALLERY. (FC-406-1D)
3. 18-#12-1½" C TO JUNCTION BOX. (FC-406-1C)
4. 6-#12-1"C TO STARTERS FOR 406-1 & 422-2 IN MCC-12 (FC-406-1B)
5. 12-#12-1¼"C TO STARTERS FOR 411-1, 411-2, 412-1 & 412-2 IN MCC-13 (FC-406-1A)

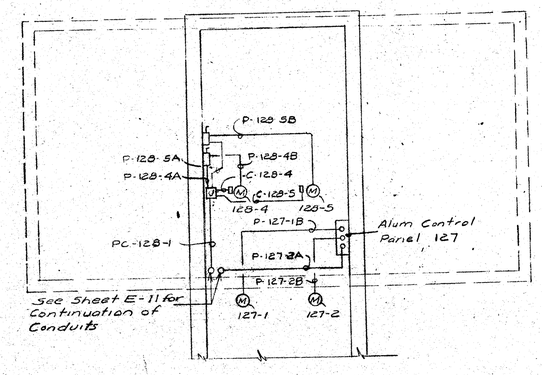

SUPPLEMENTAL
PLAN - BASEMENT
CHEMICAL BUILDING

Note:
-Verify exact location of fixtures with Engineers prior to installation to avoid conflict with equipment installed by others.
See Sheet #59 for Wiring Diagram of Polymer Feed System.

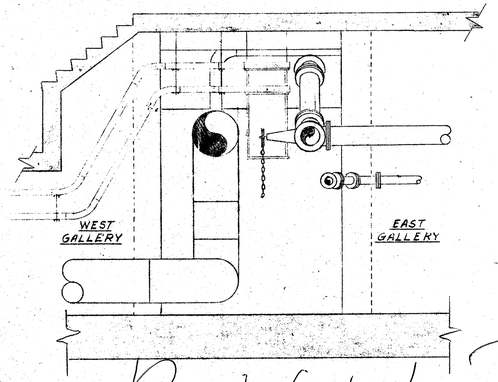

SECTION (1/E-6)
Scale: 1/4"=1'-0"

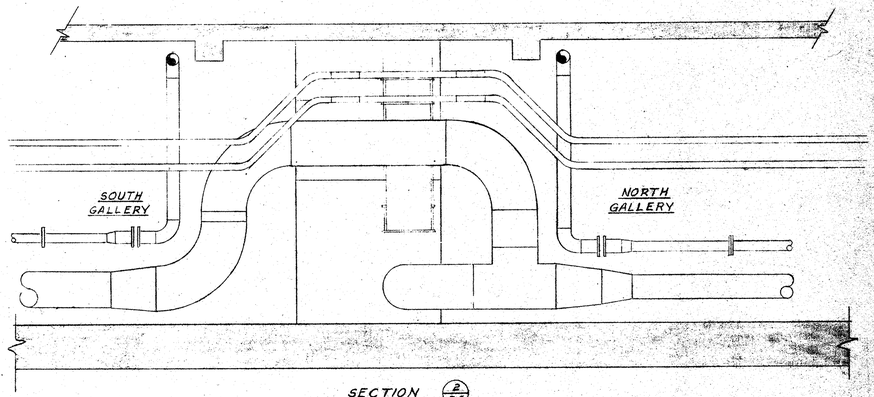

SECTION (2/E-6)
Scale: 1/4"=1'-0"

AS BUILT

ROBSON & WOESE INC.
CONSULTING ENGINEERS
SYRACUSE NEW YORK

ONONDAGA COUNTY DEPARTMENT OF PUBLIC WORKS
DIVISION OF DRAINAGE AND SANITATION
BREWERTON WATER POLLUTION CONTROL PLANT
EAST & WEST GALLERIES
ELECTRICAL
TOWN OF CICERO ONONDAGA CO., N.Y.

BARTON, BROWN, CLYDE & LOGUIDICE
CONSULTING ENGINEERS & LAND SURVEYORS
NORTH SYRACUSE, NEW YORK

DATE: FEBRUARY 1975
SCALE: AS SHOWN
FILE NO.: 55.32-100F
E-6

REVISIONS

IN CHARGE OF: F.A.L.
DESIGNED BY: W.K.
DRAWN BY: J.R.S. B.C.R.
CHECKED BY: W.K.

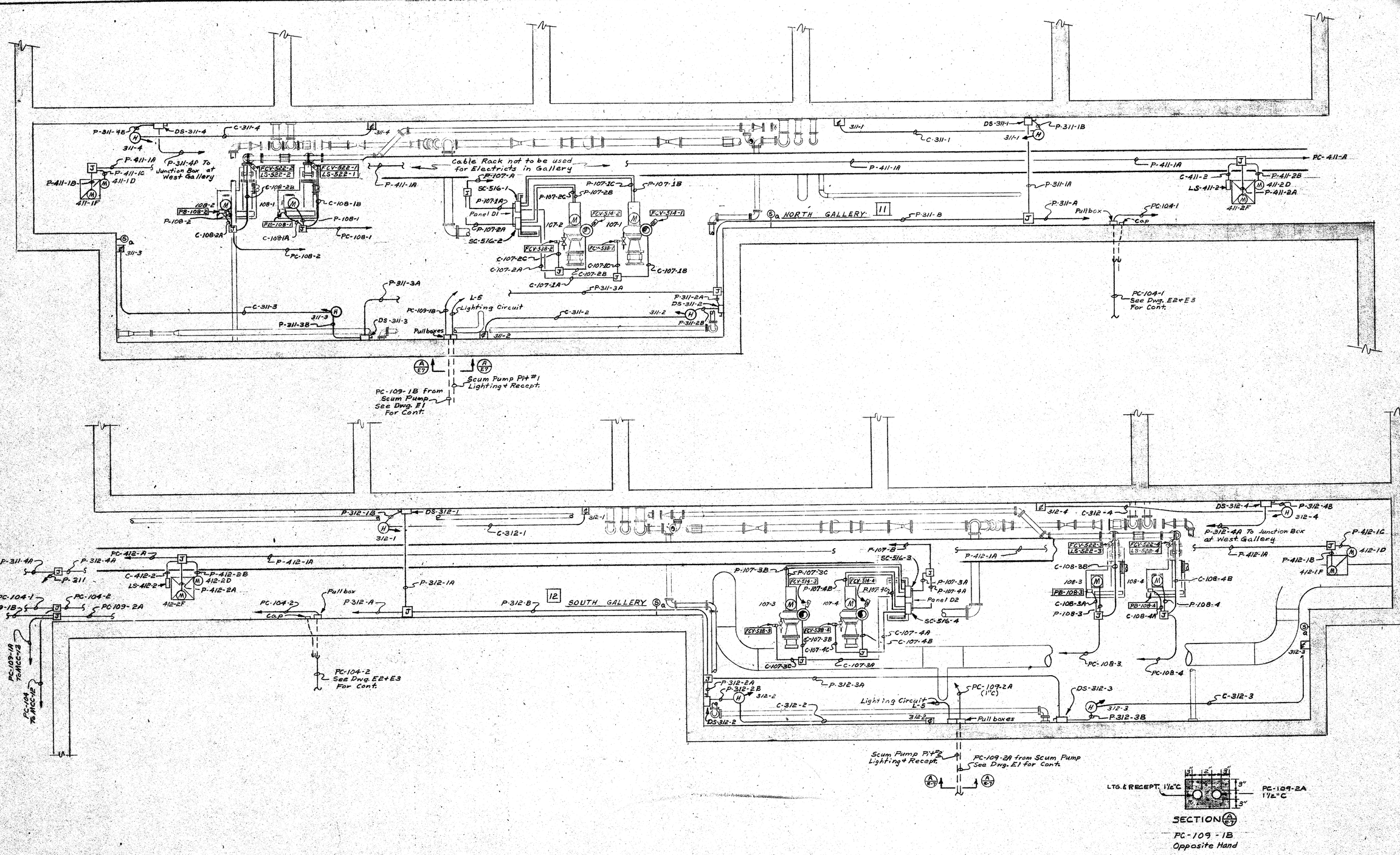

IN CHARGE OF: F.A.L.
DESIGNED BY: W.K.
DRAWN BY: J.P.S.
CHECKED BY: W.K.

ROBSON & WOESE INC.
CONSULTING ENGINEERS
SYRACUSE NEW YORK

REVISIONS

ONONDAGA COUNTY DEPARTMENT OF PUBLIC WORKS
DIVISION OF DRAINAGE AND SANITATION
BREWERTON WATER POLLUTION CONTROL PLANT

NORTH & SOUTH GALLERIES
ELECTRICAL

TOWN OF CICERO ONONDAGA CO., N.Y.

BARTON, BROWN, CLYDE & LOGUIDICE
CONSULTING ENGINEERS & LAND SURVEYORS
NORTH SYRACUSE, NEW YORK

DATE: FEBRUARY 1975
SCALE: 1" = 1'-0"
FILE NO.: 55.32-101F

E-7

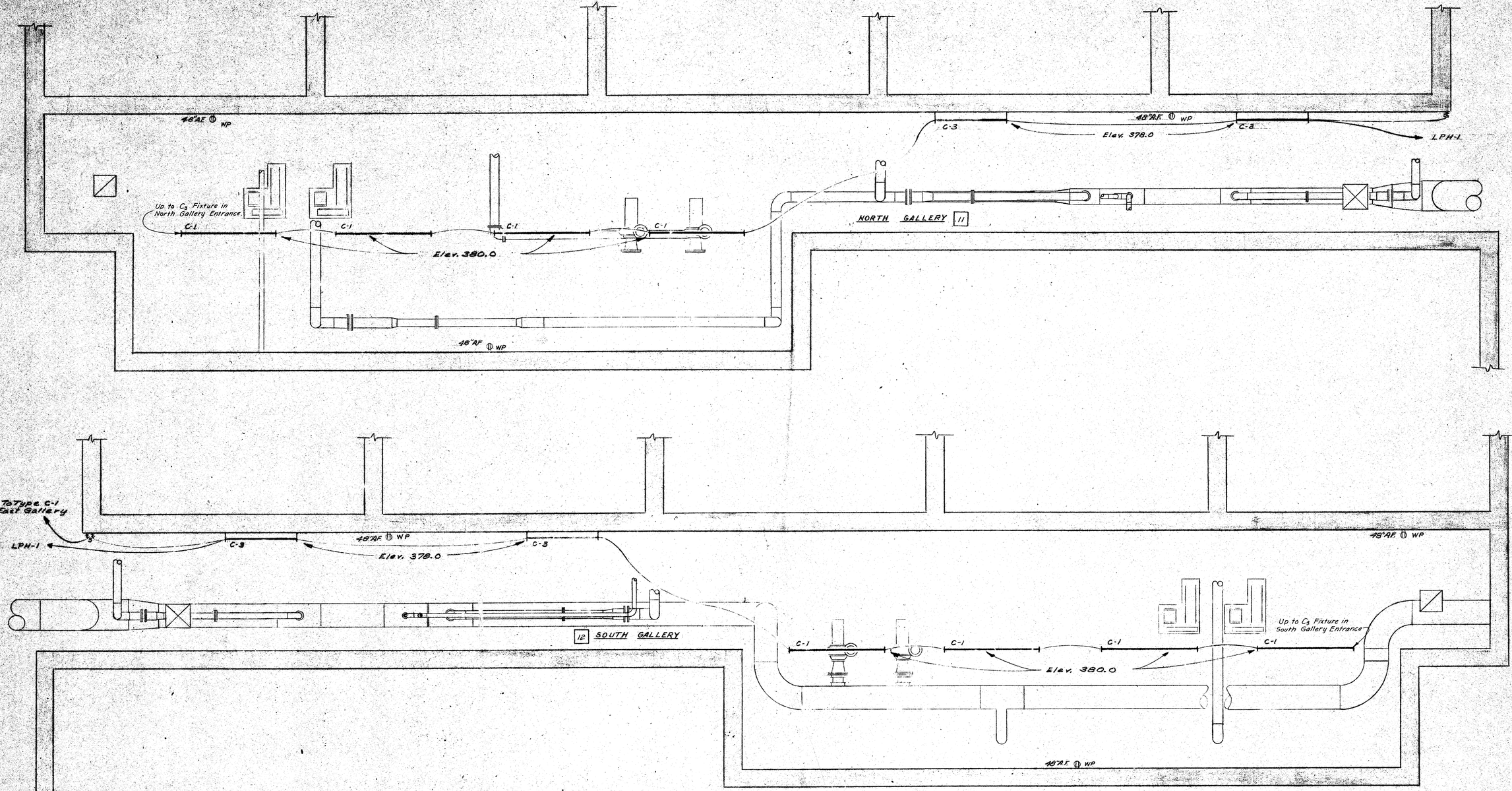

Note:
- Verify exact location of fixtures with Engineers prior to installation to avoid conflict with equipment installed by others.

IN CHARGE OF: F.A.L.
DESIGNED BY: W.K.
DRAWN BY: J.P.S.
CHECKED BY: W.K.

ROBSON & WOESE INC.
CONSULTING ENGINEERS
SYRACUSE NEW YORK

REVISIONS

ONONDAGA COUNTY DEPARTMENT OF PUBLIC WORKS
DIVISION OF DRAINAGE AND SANITATION
BREWERTON WATER POLLUTION CONTROL PLANT
NORTH & SOUTH GALLERIES
ELECTRICAL
TOWN OF CICERO ONONDAGA CO., N.Y.

BARTON, BROWN, CLYDE & LOGUIDICE
CONSULTING ENGINEERS & LAND SURVEYORS
NORTH SYRACUSE, NEW YORK

DATE: FEBRUARY 1975
SCALE: 1/4"=1'-0"
FILE NO.: 55.32-102F

E-8

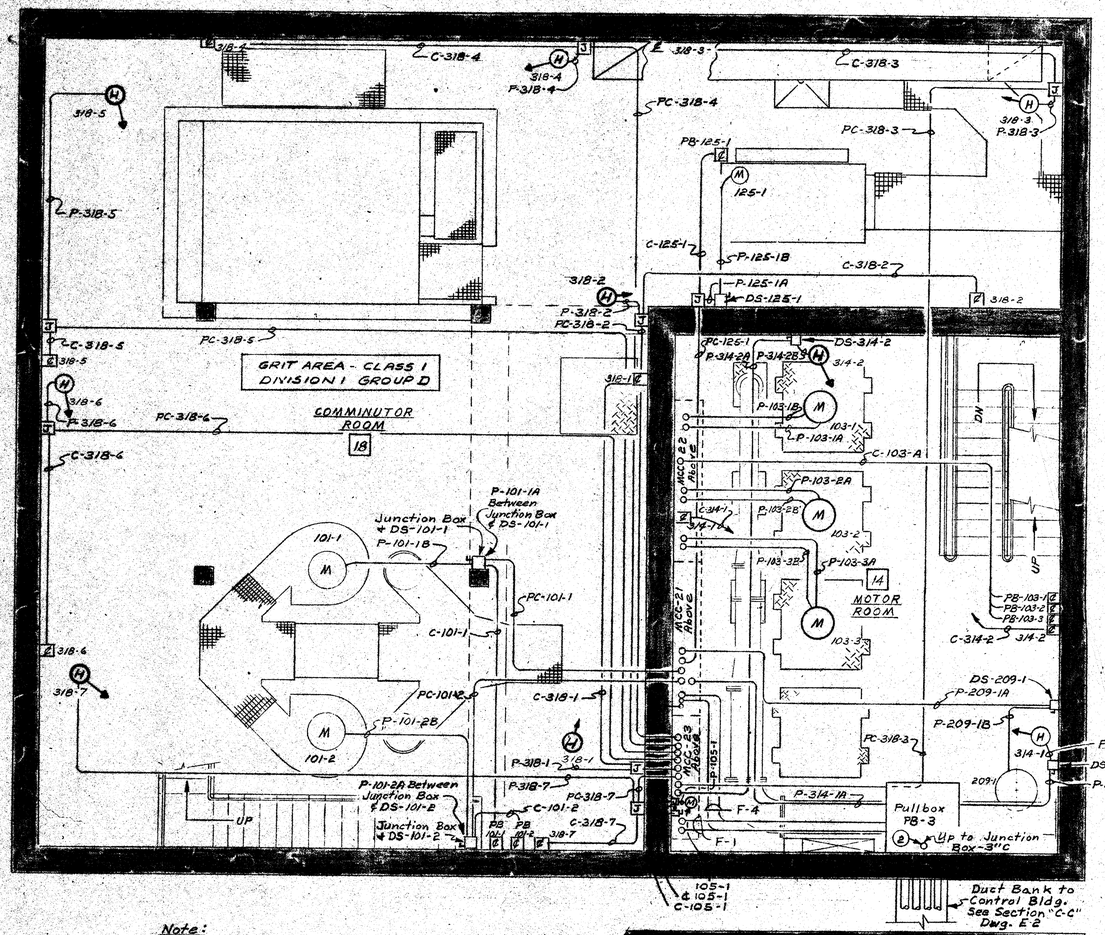

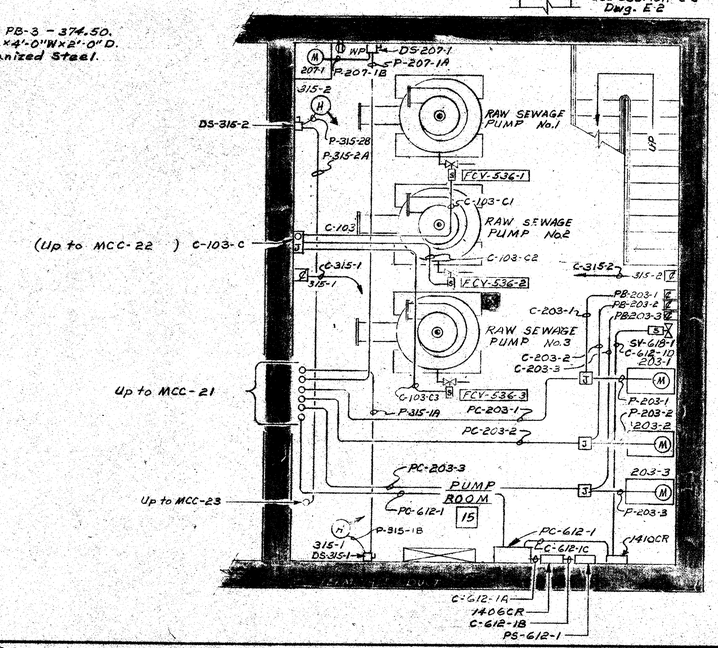

Note:

Elev. at top of Pullbox PB-3 - 374.50.
Pullbox shall be 4'-0"L x 4'-0"W x 2'-0"D.
Fabricate from Galvanized Steel.

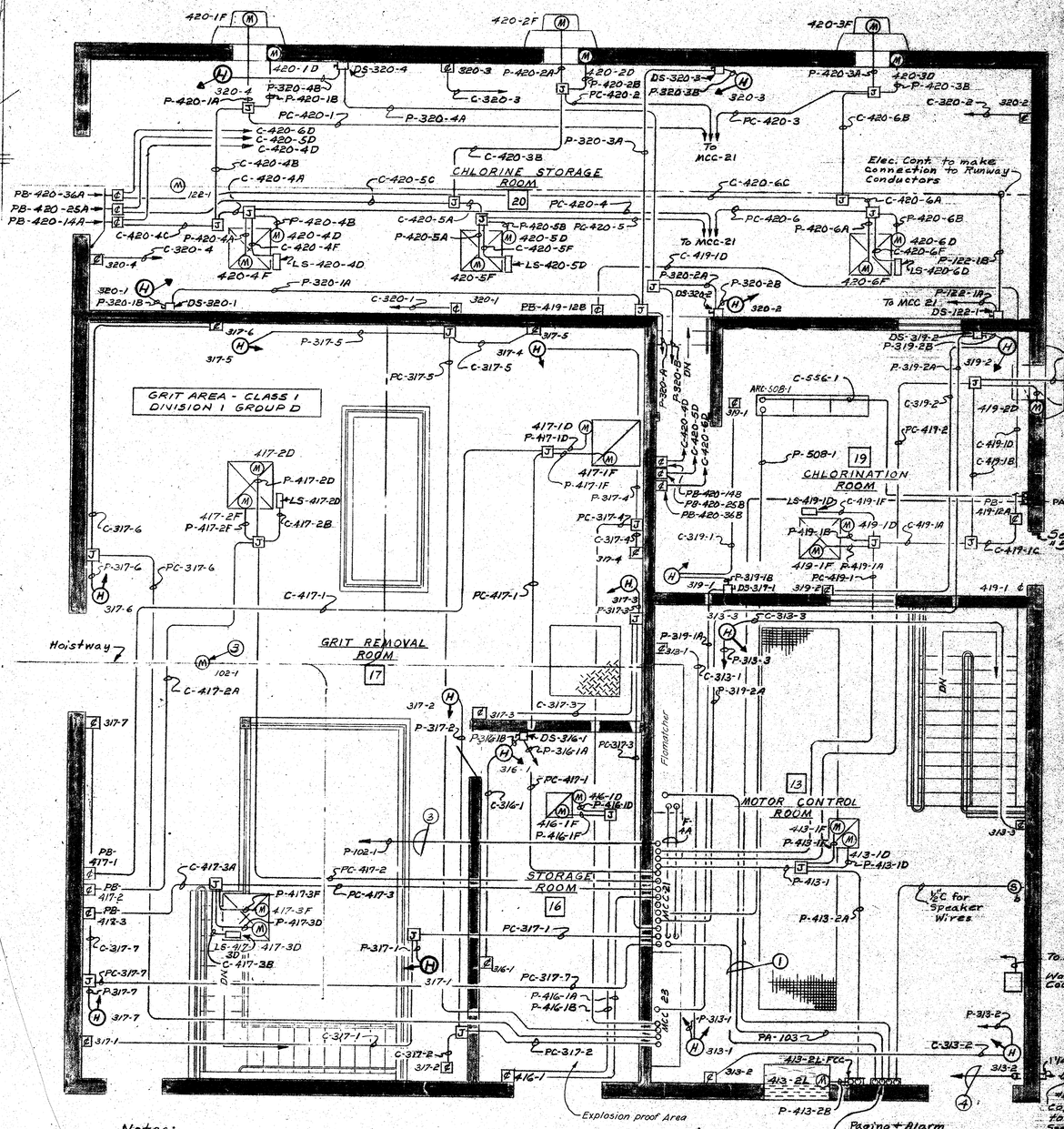

Notes:

1. Provide 1" conduits as shown, for Chlorination, Raw Sewage Pumps and Effluent Pumps Alarm Systems. Verify with Engineers points of connection and wire quantities.
2. Provide 1-12C-#12AWG Cable from Junction box in Motor Control Room of Pumping Station to Instrument Panel in Control Room of Control Building, use 3" conduit in Duct Bank.
3. Contractor to make connection to Hoist Power System as directed.
4. 1¼" Conduit with #4/0 Grd. Wire, tie to Grd. Busses of MCC's 21, 22 & 23.
5. Provide door switch equal to P&S 6960 w/box in hinged side of door parallel w/ weatherproof. Door switch to energize control relay with rated contacts interlocked w/ supply and exhaust fan control circuits. Provide contacts for light actuation with relay.

IN CHARGE OF: F.A.L
DESIGNED BY: W.K.
DRAWN BY: J.R.S.
CHECKED BY: W.K.

KO SON & WOESE INC.

ONONDAGA COUNTY DEPARTMENT OF PUBLIC WORKS
DIVISION OF DRAINAGE AND SANITATION
BREWERTON WATER POLLUTION CONTROL PLANT

RAW SEWAGE PUMPING STATION
ELECTRICAL

TOWN OF CICERO — ONONDAGA CO., N.Y.

BARTON, BROWN, CLYDE & LOGUIDICE
CONSULTING ENGINEERS & LAND SURVEYORS
NORTH SYRACUSE, NEW YORK

DATE: FEBRUARY 1975
SCALE: 1/4" = 1'-0"
FILE NO.: 55.32-103F

REVISIONS

E-9

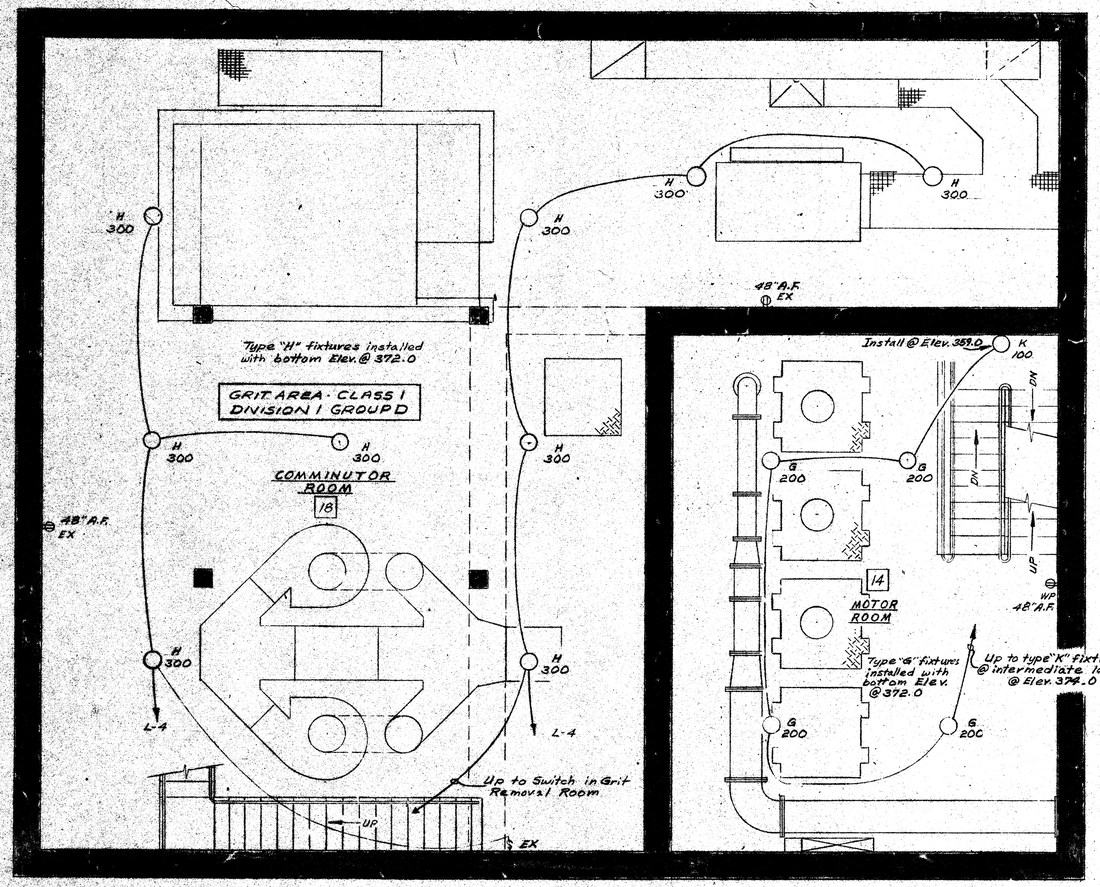

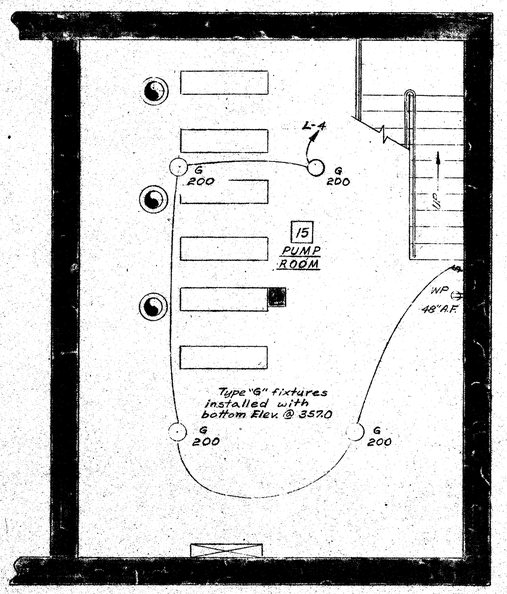

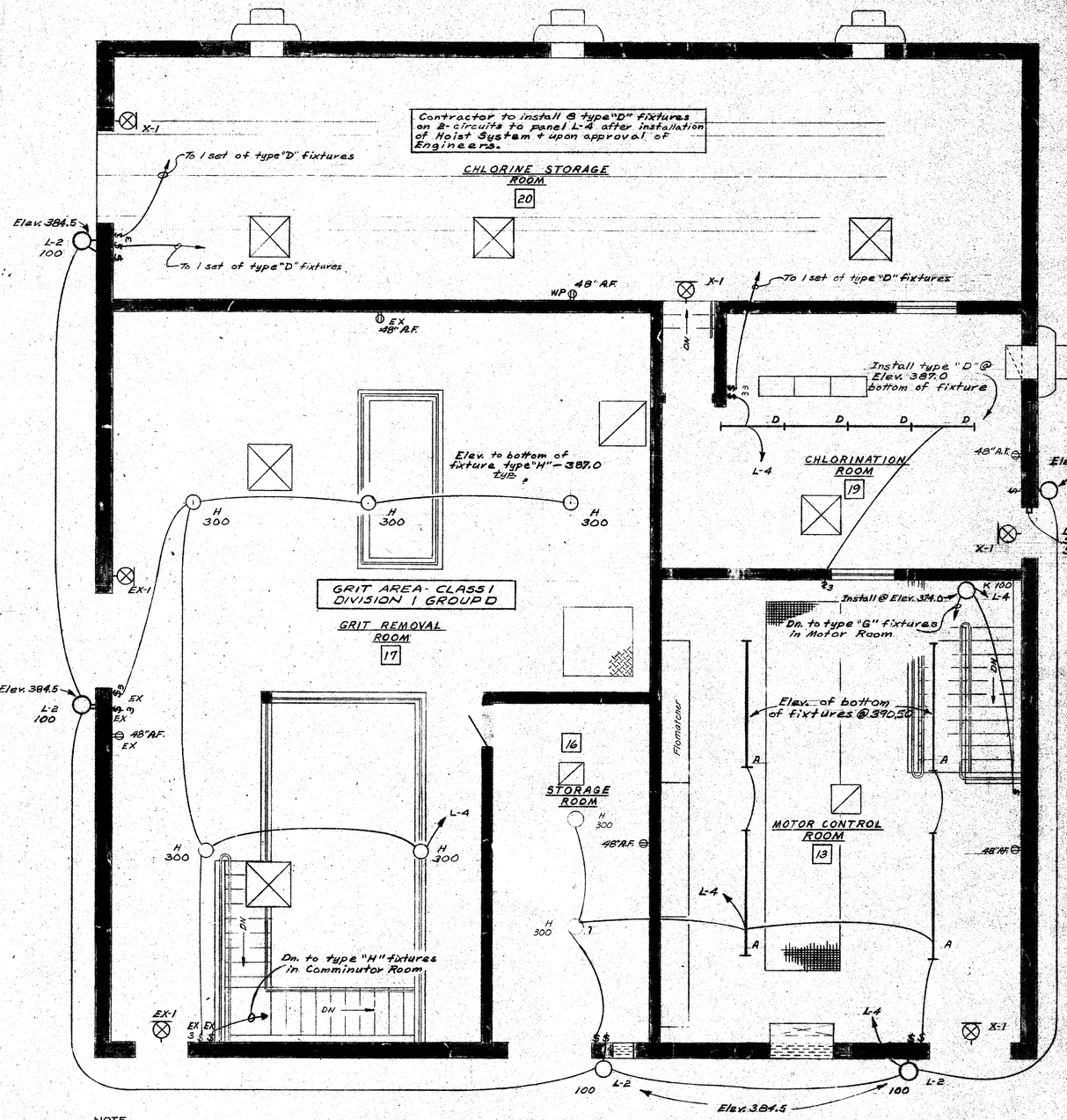

NOTE.
CIRCUIT ALL EXIT LIGHTS "X-1" ON ONE CIRCUIT OF 2-#12-1/2"C TO 20A-1P BREAKER IN PANEL L-4. PROVIDE HANDLE LOCK.

Note:
Verify exact location of fixtures with Engineers prior to installation to avoid conflict with equipment installed by others.

IN CHARGE OF: F.A.L.
DESIGNED BY: W.K.
DRAWN BY: W.P.S.
CHECKED BY: W.K.

ROBSON & WOESE INC.
CONSULTING ENGINEERS
SYRACUSE NEW YORK

REVISIONS

ONONDAGA COUNTY DEPARTMENT OF PUBLIC WORKS
DIVISION OF DRAINAGE AND SANITATION

BREWERTON WATER POLLUTION CONTROL PLANT

RAW SEWAGE PUMPING STATION

ELECTRICAL

TOWN OF CICERO — ONONDAGA CO., N.Y.

BARTON, BROWN, CLYDE & LOGUIDICE
CONSULTING ENGINEERS & LAND SURVEYORS
NORTH SYRACUSE, NEW YORK

DATE: FEBRUARY 1975
SCALE: 4" = 1'-0"
FILE NO.: 55.32-104F

E-10

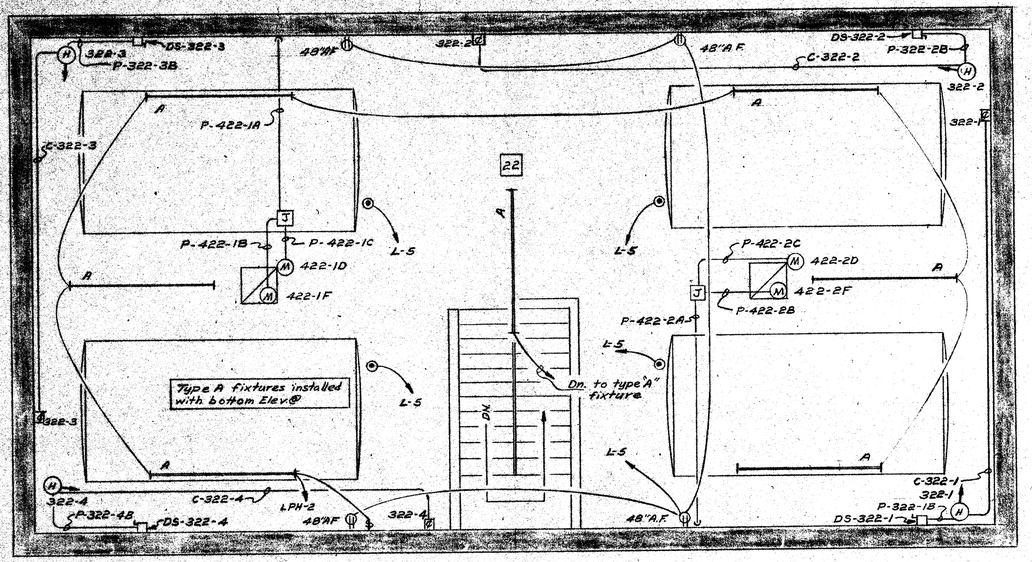

PLAN
SECOND FLOOR - CHEMICAL BUILDING
No Scale

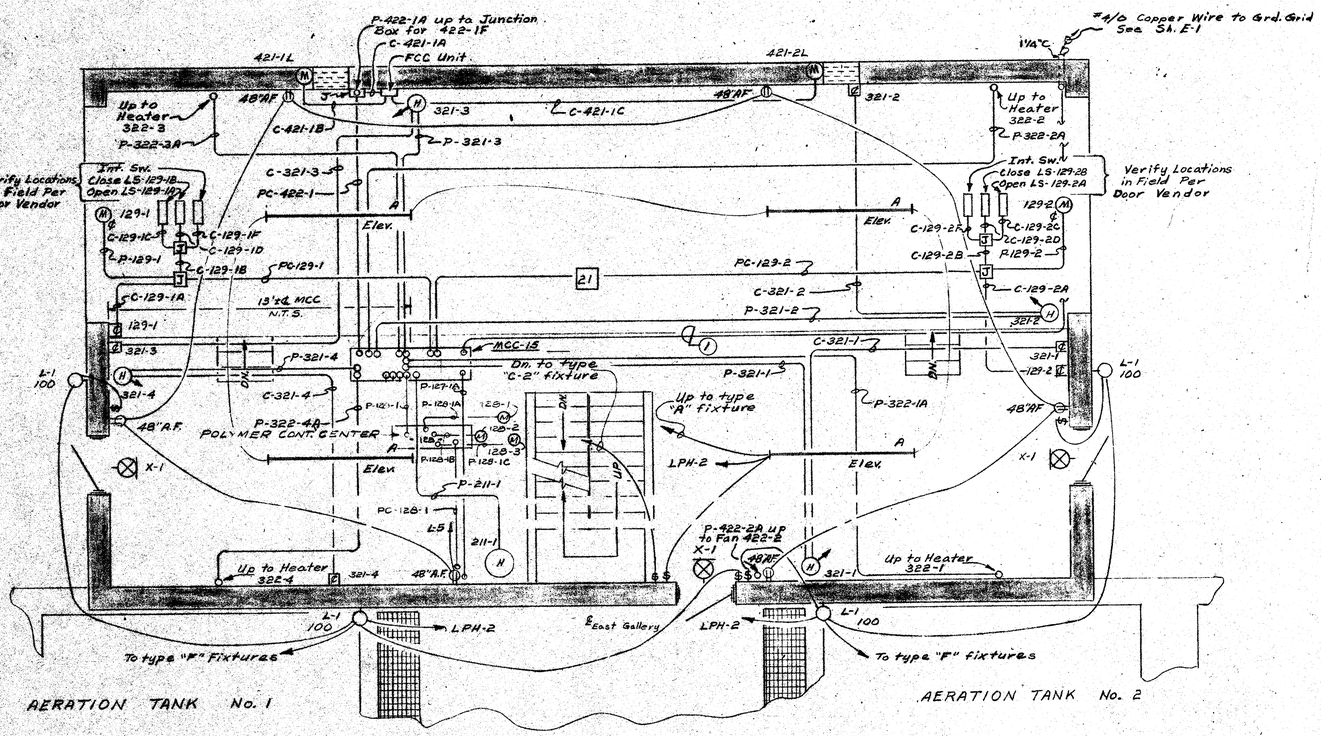

PLAN
FIRST FLOOR - CHEMICAL BUILDING
No Scale

MOTOR CONTROL CENTER SCHEDULE

MCC NO.	VOLTAGE	BUSSES	BUS BRACING RMS AMPERES SYMMETRICAL	BRANCH CIRCUIT BREAKER INTERRUPTING RATING (MIN.) RMS AMPERES SYMMETRICAL
21 & 22	480/277V 3φ 4W	800A	25,000	18,000
11	480/277V 3φ 4W	1200A	50,000	35,000
12	480/277V 3φ 4W	600A	25,000	22,000
13	480/277V 3φ 4W	600A	25,000	22,000
14 (FUTURE)	-	-	-	-
23	480/277V 3φ 4W	600A	25,000	18,000
15	480/277V 3φ 4W	600A	25,000	18,000

LIGHTING PANELBOARD AND TRANSFORMER SCHEDULE

PANEL					TRANSFORMER			
PANEL NO.	VOLTAGE	BUSSES	MOUNT.	CIRCUIT BRK'S	TRANS NO.	RATING	VOLTAGE	MOUNTING
L-1	120/240V 1φ 3W	100A	MCC-13	1-30A-2P 6-20A-1P 4-1P SPACES	T-1	10KVA 1φ	480V-120/240	MCC-13
L-2A	120/240V 1φ 3W	100A	MCC-12	24-20A-1P 6-1P SPACES	T-2A	10KVA 1φ	480V-120/240	MCC-12
L-2B	208/120V 3φ 4W	100A	MCC-12	24-20A-1P 6-1P SPACES	T-2B	30KVA 3φ	480V-208/120	MCC-12
L-3	120/240V 1φ 3W	100A	MCC-11	10-20A-1P 8-1P SPACES	T-3	15KVA 1φ	480V-120/240	MCC-11
L-4	208/120V 3φ 4W	100A	MCC-21	28-20A-1P 2-1P SPACES	T-4	30KVA 3φ	480V-208/120	MCC-21
L-5	120/240V 1φ 3W	100A	MCC-15	14-20A-1P 4-1P SPACES	T-5	15KVA 1φ	480V-120/240	MCC-15
LPH-1	480/277 3φ 4W	100A	MCC-12	12-20A-1P	-	-	-	-
LPH-2	480/277V 3φ 4W	100A	MCC-15	4-20A-3P 8-20A-1P 4-1P SPACES	-	-	-	-

NOTE:
ALL PANELBOARD CIRCUIT BREAKERS TO HAVE A MINIMUM OF 10,000 SYMMETRICAL AMPERES INTERRUPTING RATING EXCEPT LPH-1. LPH-1 PANELBOARD CIRCUIT BREAKERS TO HAVE MINIMUM OF 22,000 SYMMETRICAL AMPERES INTERRUPTING RATING

Note:
- Verify exact location of fixtures with Engineers prior to installation to avoid conflict with equipment installed by others.
- Circuit all Exit Lights "X-1" on one circuit of 2-#12-½"C to 20A-1P Breaker in Pnl. LPH-2, provide Handle Lock.

① 1¼" Conduit with #4/o Copper Wire, tie to Grd. Buss of MCC-15
2. See Sheet #59 For Wiring Diagram of Polymer Feed System

IN CHARGE OF: F.A.L.
DESIGNED BY: W.K.
DRAWN BY: J.P.S.
CHECKED BY: W.K.

ROBSON & WOESE INC.
CONSULTING ENGINEERS
SYRACUSE NEW YORK

REVISIONS

ONONDAGA COUNTY DEPARTMENT OF PUBLIC WORKS
DIVISION OF DRAINAGE AND SANITATION
BREWERTON WATER POLLUTION CONTROL PLANT

CHEMICAL BUILDING
ELECTRICAL

TOWN OF CICERO ONONDAGA CO., N. Y.

BARTON, BROWN, CLYDE & LOGUIDICE
CONSULTING ENGINEERS & LAND SURVEYORS
NORTH SYRACUSE, NEW YORK

DATE: FEBRUARY 1975
SCALE: NONE
FILE NO.: 55.32-105F

E-11

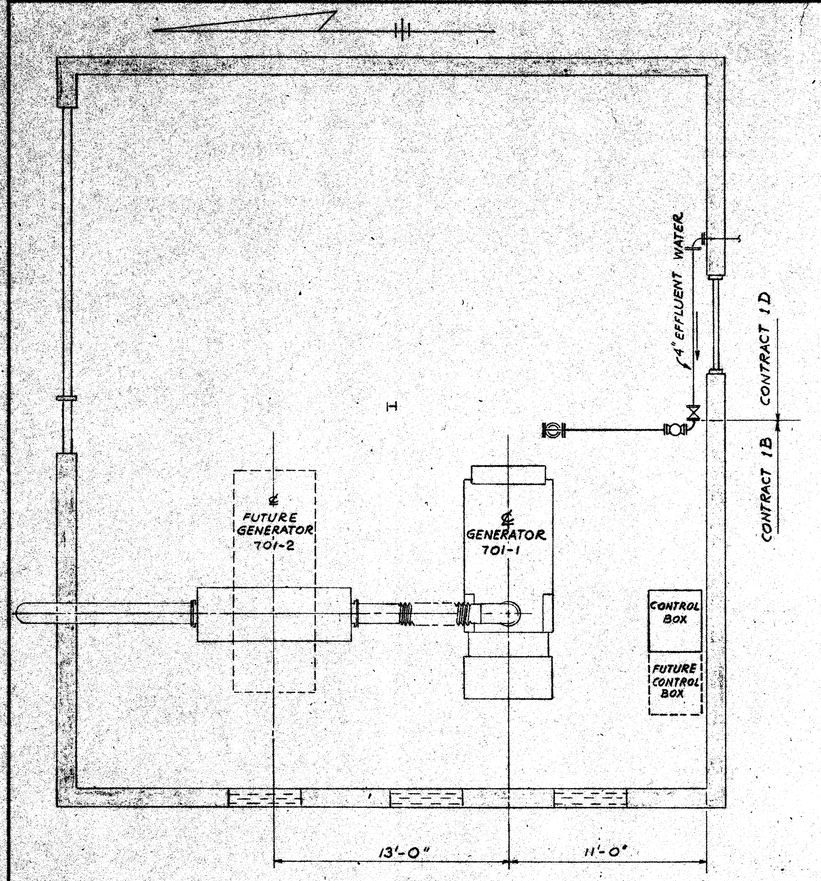

PLAN
SCALE : 1/4" = 1'-0"

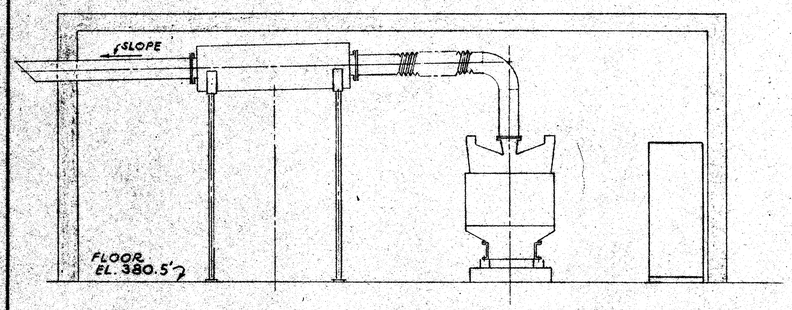

ELEVATION LOOKING EAST
SCALE : 1/4" = 1'-0"

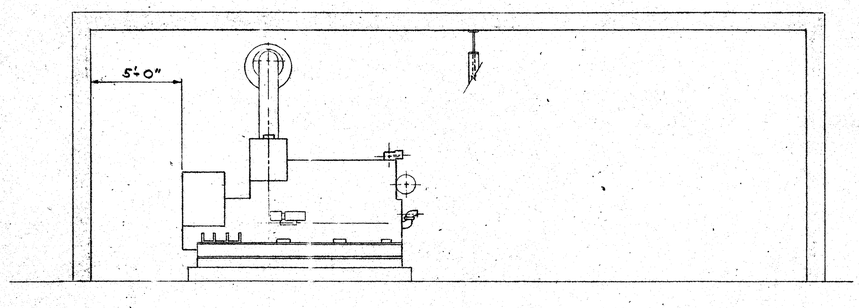

ELEVATION LOOKING NORTH
SCALE : 1/4" = 1'-0"

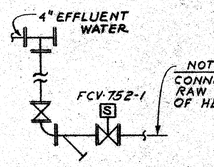

TYPICAL DETAIL "X"
NO SCALE

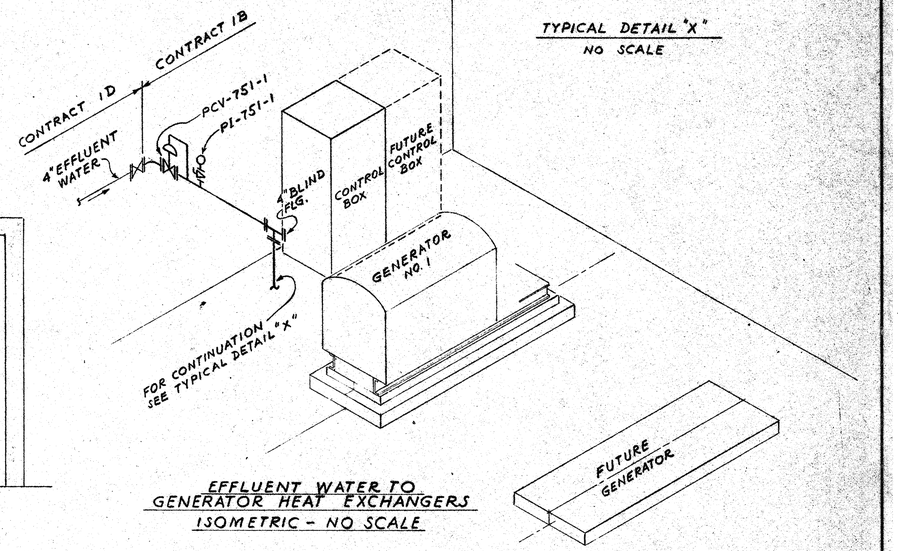

EFFLUENT WATER TO GENERATOR HEAT EXCHANGERS
ISOMETRIC - NO SCALE

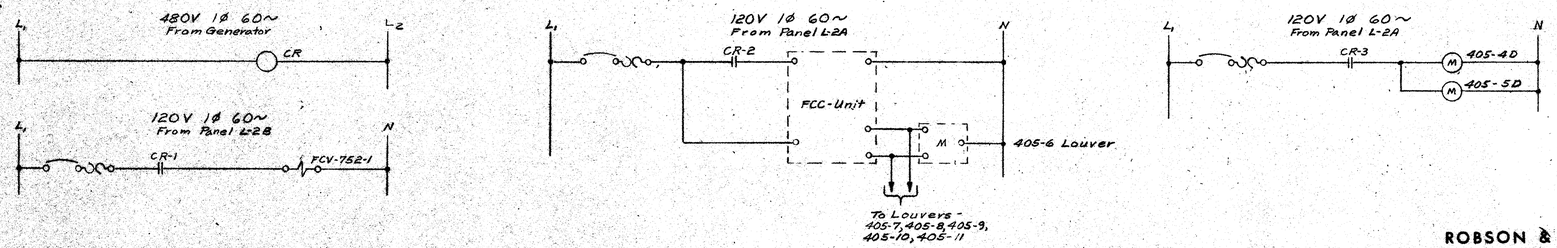

Interlocking of Generator with Heat Exchanger Control and Garage Wall Louvers and Ceiling Dampers

IN CHARGE OF: F.A.L.
DESIGNED BY: P.I.
DRAWN BY: P.I.
CHECKED BY: P.I.

ROBSON & WOESE INC.
CONSULTING ENGINEERS
SYRACUSE NEW YORK

REVISIONS

ONONDAGA COUNTY DEPARTMENT OF PUBLIC WORKS
DIVISION OF DRAINAGE AND SANITATION
BREWERTON WATER POLLUTION CONTROL PLANT
STANDBY POWER SYSTEM
ELECTRICAL
TOWN OF CICERO ONONDAGA CO., N.Y.

BARTON, BROWN, CLYDE & LOGUIDICE
CONSULTING ENGINEERS & LAND SURVEYORS
NORTH SYRACUSE, NEW YORK

DATE: FEBRUARY 1975
SCALE: NONE
FILE NO.: 55.32-106F

E-12

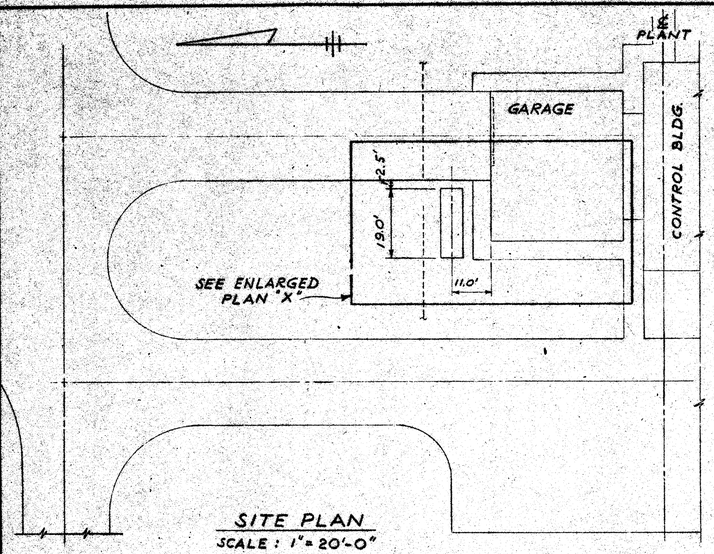

SITE PLAN
SCALE : 1" = 20'-0"

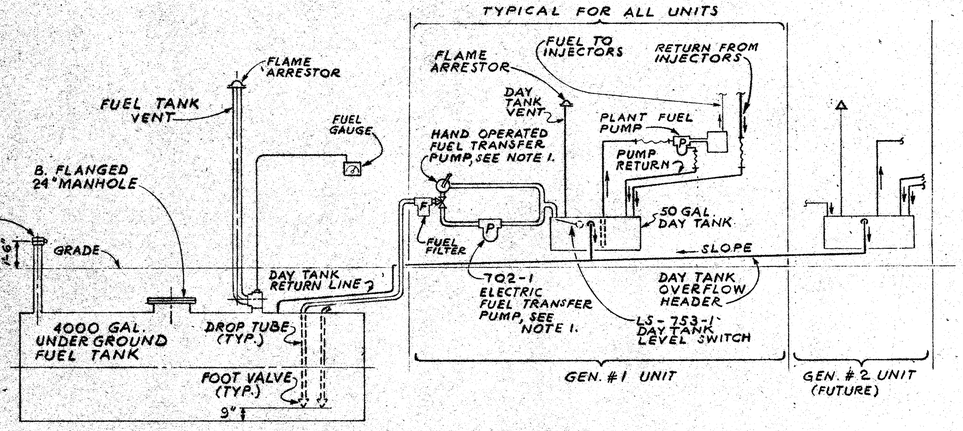

FUEL LINES
DIAGRAM - NO SCALE

NOTE 1. FUEL TRANSFER PUMP TO BE PREASSEMBLED AND INTRICAL WITH DAY TANK

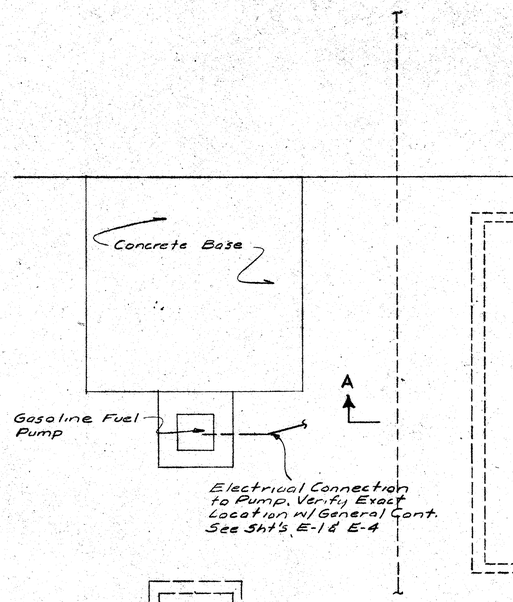

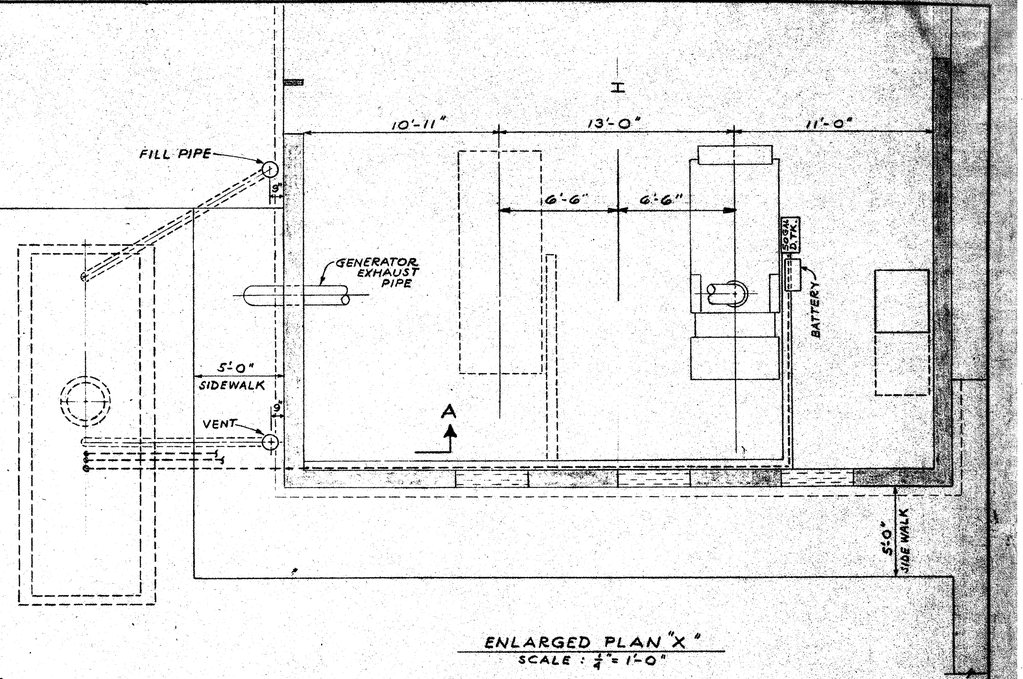

ENLARGED PLAN "X"
SCALE : 1/4" = 1'-0"

SECTION "A-A"
SCALE : 1/4" = 1'-0"

IN CHARGE OF: F.A.L.
DESIGNED BY: R.I.
DRAWN BY: R.I.
CHECKED BY: F.L.

ROBSON & WOESE INC.
CONSULTING ENGINEERS
SYRACUSE NEW YORK

REVISIONS

ONONDAGA COUNTY DEPARTMENT OF PUBLIC WORKS
DIVISION OF DRAINAGE AND SANITATION
BREWERTON WATER POLLUTION CONTROL PLANT

STANDBY POWER SYSTEM
ELECTRICAL

TOWN OF CICERO ONONDAGA CO., N.Y.

BARTON, BROWN, CLYDE & LOGUIDICE
CONSULTING ENGINEERS & LAND SURVEYORS
NORTH SYRACUSE, NEW YORK

DATE: FEBRUARY 1975
SCALE: NONE
FILE NO: 55.32-107F

E-13

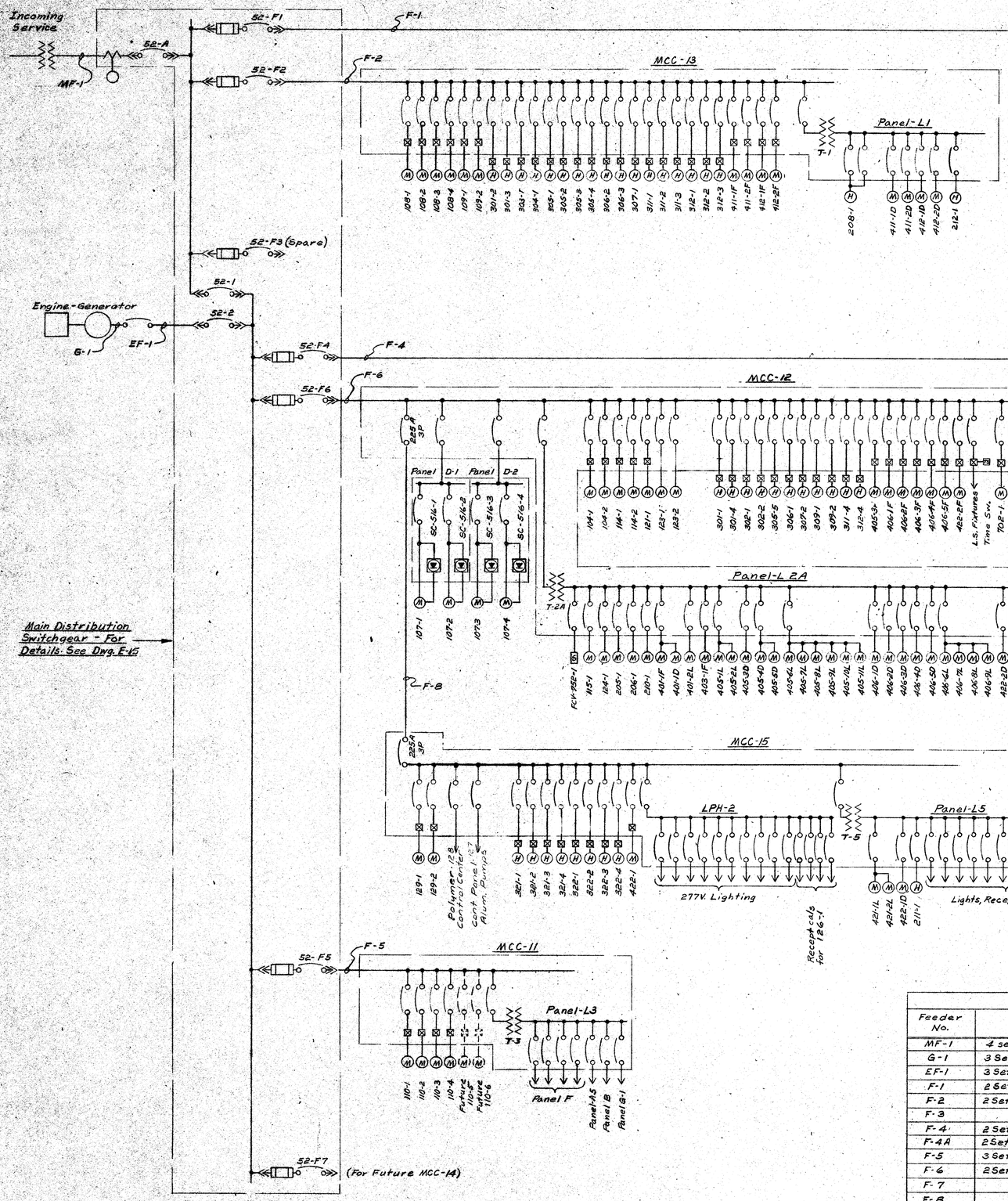

SEE ITE SWITCHBOARD & MCC DWG'S.

Feeder Schedule			
Feeder No.	Wire & Conduit	Circuit Breaker	Breaker Location
MF-1	4 sets [4-500MCM-CU-4"C]		
G-1	3 Sets [4-500MCM-CU-4"C]		
EF-1	3 Sets [4-500MCM-CU-4"C]	1200 A	Generator Control Box
F-1	2 Sets [4-350 MCM-CU-4"C]	600 A	Main Swgr.
F-2	2 Sets [4-350 MCM-CU-4"C]	600A	Main Swgr.
F-3	Not Used		Main Swgr.
F-4	2 Sets [4-500MCM-CU-4"C]	800A	Main Swgr.
F-4A	2 Sets [4-350MCM-CU-4"C]	600A	MCC-21
F-5	3 Sets [4-500MCM-CU-4"C]	1200A	Main Swgr.
F-6	2 Sets [4-350MCM-CU-4"C]	600A	Main Swgr.
F-7	Future For MCC-14		Main Swgr.
F-8	4 - 4/0 - CU - 3"C	225 A	MCC-12

Note: See sheet E-11 for Motor Control Center Schedules & Lighting Panelboard & Transformer Schedules.

ROBSON & WOESE INC.

IN CHARGE OF: F.A.L.
DESIGNED BY: W.K.
DRAWN BY: J.R.S.
CHECKED BY: W.K.

ONONDAGA COUNTY DEPARTMENT OF PUBLIC WORKS
DIVISION OF DRAINAGE AND SANITATION
BREWERTON WATER POLLUTION CONTROL PLANT

DISTRIBUTION DIAGRAM

ELECTRICAL

TOWN OF CICERO ONONDAGA CO., N.Y.

BARTON, BROWN, CLYDE & LOGUIDICE
CONSULTING ENGINEERS & LAND SURVEYORS
NORTH SYRACUSE, NEW YORK

DATE: FEBRUARY 1975
SCALE: NONE
FILE NO.: 55.32-108F

E-14

REVISIONS

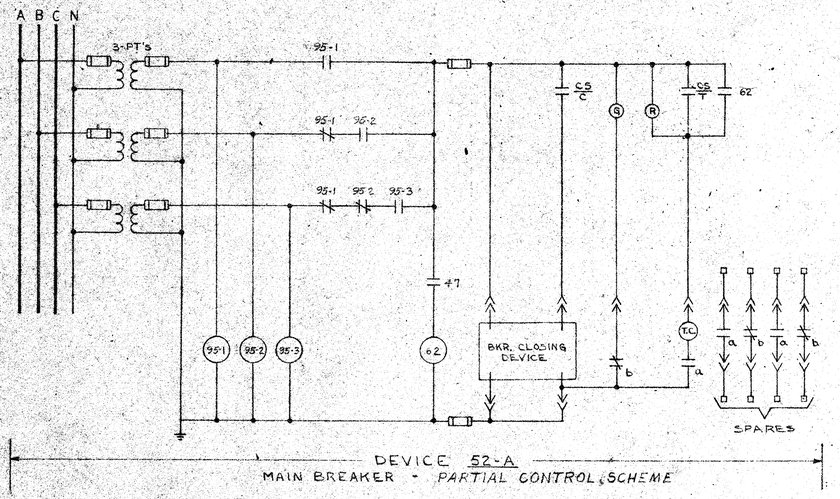

DEVICE 52-A
MAIN BREAKER - PARTIAL CONTROL SCHEME

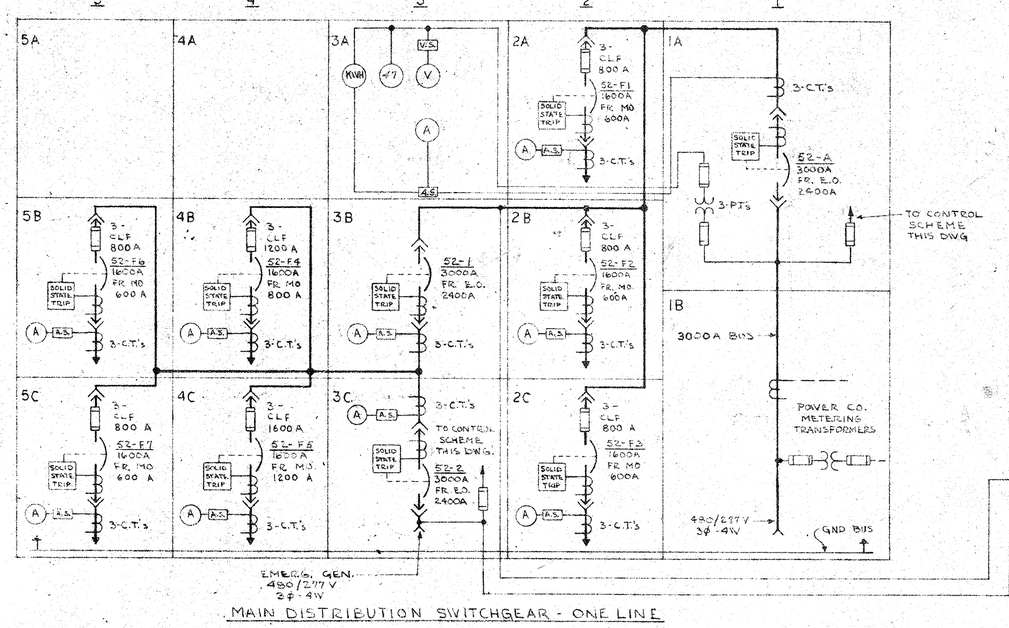

MAIN DISTRIBUTION SWITCHGEAR - ONE LINE

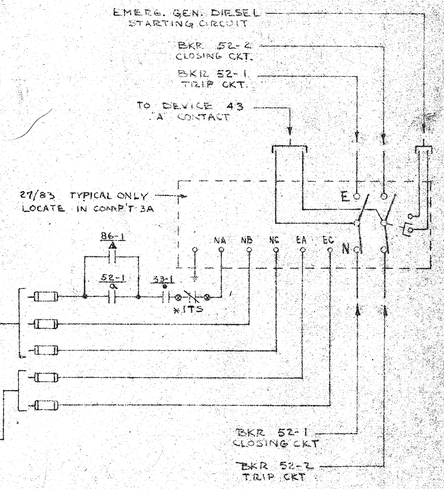

LEGEND

47	NEGATIVE PHASE SEQUENCE VOLTAGE RELAY - NBV/IAC OR CVQ.
95-1,2,3	VOLTAGE SCANNING RELAYS WITH N.O. & N.C. CONTACTS.
27/83	AUTO. TRANSFER SW. ON U.V. & RETRANSFER ON N.V.
● 33-( )	POSITION (CELL) SWITCH.
43	TRANSFER SWITCH - A-AUTO; M-MANUAL
52	AIR CIRCUIT BREAKER
62	TIMING RELAY
83-1	CONTROL SOURCE SELECTOR RELAY (ADJUSTABLE)
83X-( )	AUX. TO DEV. 83-1, SELECT SOURCE TRANSFER CONTROL
▲ 86-( )	OVERCURRENT ALARM MICRO SW; USED AS LOCKOUT & OC INDICATION - ORANGE LIGHT
CS	CONTROL SWITCH (EKD)
AS	AMMETER SWITCH
VS	VOLTMETER SWITCH
A	AMMETER
V	VOLTMETER
KWH	KILOWATT HOUR METER
ITS	AUTOMATIC EXERCISER - TIME CLOCK, N.C. CONTACT, CONTACT OPERATES TO SIMULATE LOSS OF NORMAL VOLTAGE. (REMOTE CONTACT - BY OTHERS)

NOTES

TC	TRIP COIL
X	CONTROL RELAY
●	POSITION (CELL) SW., SHOWN WITH BKR IN TEST POSITION OR DISCONNECTED
▲	ALARM SW., CONTACTS OPERATE WHEN BKR IS TRIPPED AUTOMATICALLY BY ONE OF THE FOLLOWING ATTACHMENTS: SERIES OVERLOADS, UNDERVOLTAGE, OR REVERSE CURRENT. TRIP CONTACTS DO NOT OPERATE WHEN BKR. IS TRIPPED MANUALLY OR BY SHUNT TRIP, CONTACTS SHOWN IN RESET POSITION.
*	EXTERNAL DEVICE

AUTOMATIC TRANSFER ON VOLTAGE FAILURE & RETRANSFER WHEN VOLTAGE RETURNS TO NORMAL CONTROLLED BY "ASCO" SW (DEV. 27/33) WITH TIME DELAY

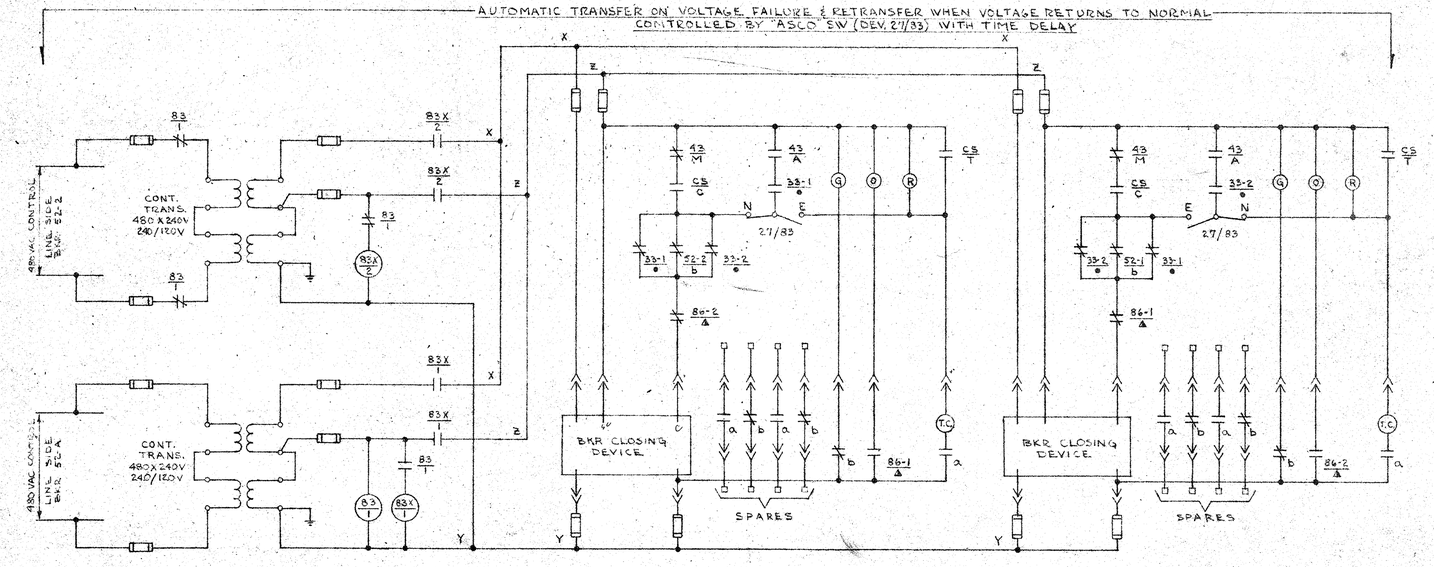

CONTROL SOURCE SELECTOR & AUXILIARY TRANSFER RELAYS | DEVICE 52-1 NORMAL SOURCE BKR. | DEVICE 52-2 EMERG. SOURCE BKR.

SEE ITE SWITCHBOARD DWG'S

IN CHARGE OF: F.A.L.
DESIGNED BY: W.R.
DRAWN BY: W.K.
CHECKED BY: F.A.L.

ROBSON & WOESE INC.
CONSULTING ENGINEERS
SYRACUSE NEW YORK

REVISIONS

ONONDAGA COUNTY DEPARTMENT OF PUBLIC WORKS
DIVISION OF DRAINAGE AND SANITATION
BREWERTON WATER POLLUTION CONTROL PLANT

MAIN DISTRIBUTION SWITCH GEAR
ELECTRICAL

TOWN OF CICERO ONONDAGA CO., N.Y.

BARTON, BROWN, CLYDE & LOGUIDICE
CONSULTING ENGINEERS & LAND SURVEYORS
NORTH SYRACUSE, NEW YORK

DATE: FEBRUARY 1975
SCALE: NONE
FILE NO.: 55.32-109F

E-15

ELECTRICAL EQUIPMENT AND CONTROL SCHEDULE

Legend:
* Supplied by Others
▲ Mounted by Others
□ Room Number

EQUIPMENT ITEM NUMBER	EQUIPMENT NAME	EQUIPMENT LOCATION	SUPPLY: HORSE POWER OR WATTS	SUPPLY: PHASE	SUPPLY: VOLTS	SUPPLY: PANEL OR CONTROL CENTER	SUPPLY: CIRCUIT BREAKER	SUPPLY: CONDUIT SCHEDULE DWG. No.	REFERENCE DRAWINGS	MOUNTED AS: COMBINATION MAGNETIC STARTER	MOUNTED AS: MANUAL MOTOR STARTER	MOUNTED AS: COMBINATION MAGNETIC CONTACTOR	MOUNTED AS: D/S CONNECT SWITCH	CONTROLS AS SCHEDULED AND AS SHOWN ON PLANS BY ‡ AND/OR ITEM NUMBER: START-STOP PUSHBUTTON	START-STOP LOCKOUT PUSHBUTTON	3-POSITION SELECTOR SW.	PILOT LIGHT	ELAPSED TIME METER	TIME DELAY RELAY	TIMER	AUXILIARIES: MISCELLANEOUS	AUXILIARIES: ITEM NUMBER	AUXILIARIES: DESCRIPTION	REMARKS
101-1	Comminutor #1	Raw Sewage Pumping Station Comminutor Rm.	15HP	3	480	MCC 21			E9, 80, E14	MCC 21			A.U.	MCC 21	A.U.	MCC 21	MCC 21							
101-2	Comminutor #2	Raw Sewage Pumping Station Comminutor Rm.	15HP	3	480	MCC 21			E9, 80, E14	MCC 21			A.U.	MCC 21	A.U.	MCC 21	MCC 21							
102-1	Hoist	Raw Sewage Grit Removal Rm.	15HP	3	480	MCC 21			E9, 80, E14															
103-1	Raw Sewage Pump #1	Raw Sewage Pumping Station Pump Room	75HP	3	480	MCC 22			E9, E14, 64						A.U.									
103-2	Raw Sewage Pump #2	Raw Sewage Pumping Station Pump Room	75HP	3	480	MCC 22			E9, E14, 64						A.U.									
103-3	Raw Sewage Pump #3	Raw Sewage Pumping Station Pump Room	75HP	3	480	MCC 22			E9, E14, 64						A.U.									
104-1	Sludge Collector #1	Settling Tank #1	½HP	3	480	MCC 12			E2, E14, 80	MCC 12			A.U.	MCC 12	A.U.	MCC 12	MCC 12	MCC 12	MCC 12					
104-2	Sludge Collector #2	Settling Tank #2	½HP	3	480	MCC 12			E2, E14, 80	MCC 12			A.U.	MCC 12	A.U.	MCC 12	MCC 12	MCC 12	MCC 12					
105-1	Effluent Sample Pump	Raw Sewage Pumping Station Chlorination Room	¾HP	3	480	MCC 21			E9, E14, 80	MCC 21					A.U.	MCC 21	MCC 21	MCC 21	MCC 21					
	Chlorine Feed Machine #1 FRC-305-1	Raw Sewage Pumping Station Chlorination Room	30W	1	120	ARC-508-1			E9, E14, 81															
106-1	Chlorine Feed Machine #2 FRC-305-2	Raw Sewage Pumping Station Chlorination Room	30W	1	120	ARC-508-1			E9, E14, 81															
	Ketridge Chlorine Analyzer ARC-308-1	Raw Sewage Pumping Station Chlorination Room	60W	1	120	Panel			E9, E14, 81															
107-1	Return Sludge Pump #1	Aeration Tanks North Gallery	15HP	3	480	Panel D-1			E7, E14, 80															
107-2	Return Sludge Pump #2	Aeration Tanks North Gallery	15HP	3	480	Panel D-1			E7, E14, 80															
107-3	Return Sludge Pump #3	Aeration Tanks South Gallery	15HP	3	480	Panel D-2			E7, E14, 80															
107-4	Return Sludge Pump #4	Aeration Tanks South Gallery	15HP	3	480	Panel D-2			E7, E14, 80															
108-1	Digested Sludge Pump #1	Aeration Tanks North Gallery	7½HP	3	480	MCC 13			E7, E14, 80	MCC 13					A.U.			MCC 13	MCC 13					
108-2	Digested Sludge Pump #2	Aeration Tanks North Gallery	7½HP	3	480	MCC 13			E7, E14, 80	MCC 13					A.U.			MCC 13	MCC 13					
108-3	Digested Sludge Pump #3	Aeration Tanks South Gallery	7½HP	3	480	MCC 13			E7, E14, 80	MCC 13					A.U.			MCC 13	MCC 13					
108-4	Digested Sludge Pump #4	Aeration Tanks South Gallery	7½HP	3	480	MCC 13			E7, E14, 80	MCC 13					A.U.			MCC 13	MCC 13					
109-1	Scum Pump #1	Settling Tank #1	5HP	3	480	MCC 13			E8, E14, 80	MCC 13														
109-2	Scum Pump #2	Settling Tank #2	5HP	3	480	MCC 13			E8, E14, 80	MCC 13														
110-1	Aeration Blower #1	Control Building Blower Room	125HP	3	480	MCC 11			E5, E14, 65	MCC 11														
110-2	Aeration Blower #2	Control Building Blower Room	125HP	3	480	MCC 11			E4, E14, 65	MCC 11														

Notes:
1. All circuits and controls sized for future increase to 185 H.P.

SEE ITE MCC DWG'S

DESIGNED BY: F.A.L.
REVISED BY: M.F.
DRAWN BY: J.R.S.
CHECKED BY: F.V.R.

ROBSON & WOESE INC.
CONSULTING ENGINEERS
SYRACUSE NEW YORK

ONONDAGA COUNTY DEPARTMENT OF PUBLIC WORKS
DIVISION OF DRAINAGE AND SANITATION
BREWERTON WATER POLLUTION CONTROL PLANT
EQUIPMENT & CONTROL SCHEDULE
ELECTRICAL
TOWN OF CICERO ONONDAGA CO., N.Y.
BARTON, BROWN, CLYDE & LOGUIDICE
CONSULTING ENGINEERS & LAND SURVEYORS
NORTH SYRACUSE, NEW YORK
DATE: FEBRUARY 1975
SCALE: NONE
FILE NO.: 55.32-110F
E10
REVISIONS

Legend:
- * Supplied by Others
- □ Mounted by Others
- [1] Room Number

ELECTRICAL EQUIPMENT AND CONTROL SCHEDULE

EQUIPMENT: Item Number through Volts · SUPPLY: Panel or Control Center, Circuit Breaker, Conduit Schedule Dwg. No. · CONTROLS (Mounted as scheduled and as shown on plans by △ and/or Item Number): Combination Magnetic Starter through Description; AUXILIARIES: Start-Stop Pushbutton through Description

Item Number △	Name	Location	Horse Power or Watts	Phase	Volts	Panel or Control Center	Circuit Breaker	Conduit Schedule Dwg. No.	Reference Drawings	Combination Magnetic Starter	Manual Motor Starter	Combination Magnetic Contactor	Disconnect Switch			Start-Stop Pushbutton	Start-Stop Lockout Pushbutton	3-Position Selector Sw.	Pilot Light	Elapsed Time Meter	Time Delay Relay	Timer		Miscellaneous	Item Number	Description	Remarks
110-3	Aeration Blower #4	Control Building Blower Room	125HP	3	480	MCC 11			E4,E14, 65	MCC 11						MCC 11	A.U.	MCC 11		MCC 11	MCC 11			□ [6] *	FIA-529-3	Surge Panel	
																								□ Panel B *	525-3	Recycle Control	
																								□ Panel B *	SV-525-3	Recycle Control Valve	
																			MCC 11						L-110-3A	Red "Blower Running"	
																								□ Panel B *	SV-526-3	Flow Control Valve	
																			MCC 11						L-110-3B	Amber "Circuit Energized"	
																			□ Panel B *						L-525-3B	Red "Recycle"	
																			MCC 11						L-529-3A	Red "Surge"	
																								MCC 11 *	TFR-529-3	Current Transformer	
																			MCC 11						L-525-3A	Red "Recycle"	
																								MCC 11	PB-528-3A	Reset Pushbutton	
																								MCC 11	546-CR	Control Relay	
																								MCC 11	547-CR	Control Relay	
																								MCC 11	PB-528-3B	Reset Pushbutton	
																			MCC 11						L-528-3A	Red "Intake Bearing Temp."	
																			MCC 11						L-528-3B	Red "Discharge Bearing Temp."	
																								□ A.U. *	TS-528-3A	Intake Bearing Temp. Sw.	
																								□ A.U. *	TS-528-3B	Discharge Bearing Temp. Sw.	
110-4	Aeration Blower #4	Control Building Blower Room	125HP	3	480	MCC 11			E4,E14, 65	MCC 11						MCC 11	A.U.	MCC 11		MCC 11	MCC 11			□ [6] *	FIA-529-4	Surge Panel	
																								□ Panel B *	525-4	Recycle Control	
																								□ Panel B *	SV-525-4	Recycle Control Valve	
																			MCC 11						L-110-4A	Red "Blower Running"	
																								□ Panel B *	SV-526-4	Flow Control Valve	
																			MCC 11						L-110-4B	Amber "Circuit Energized"	
																			□ Panel B *						L-525-4B	Red "Recycle"	
																			MCC 11						L-529-4A	Red "Surge"	
																								MCC 11 *	TFR-529-4	Current Transformer	
																			MCC 11						L-525-4A	Red "Recycle"	
																								MCC 11	PB-528-4A	Reset Pushbutton	
																								MCC 11	566-CR	Control Relay	
																								MCC 11	567-CR	Control Relay	
																								MCC 11	PB-528-4B	Reset Pushbutton	
																			MCC 11						L-528-4A	Red "Intake Bearing Temp."	
																			MCC 11						L-528-4B	Red "Discharge Bearing Temp."	
																								□ A.U. *	TS-528-4A	Intake Bearing Temp. Sw.	
																								□ A.U. *	TS-528-4B	Discharge Bearing Temp. Sw.	
111-1	Air Purification Equipment -Damper-	Control Building Air Purification Room	14W	1	120	Panel G-1			E4,E14, 81		□ Panel G-1 *							□ Panel G-1 *						□ Panel G-1 *	S-G1	Disconnect Sw.	
																								□ Panel G-1 *	705CR	Control Relay	
																			□ Panel G-1 *						L-111-1A	Green "Louver Open"	
																			□ Panel G-1 *						L-111-1B	Red "Louver Closed"	
112-1	Air Purification Equipment -Air Filter-	Control Building Air Purification Room	1/6HP	1	120	Panel G-1			E4,E14, 81															□ Panel G-1 *	SS-112-1	Fused Disconnect Switch	
																								□ Panel G-2 *	706CR	Control Relay	
																								□ Panel G-2 *	707CR	Control Relay	
																								□ Panel G-1 *	IA-557-1	Filter Media Advanced Annunciator	
																								□ Panel G-1 *	SS-557-1	Switch	
																								□ Panel G-2 *	X-557-1	Filter Control Unit	
																								□ A.U. *	XS-557-1A	Filter Senseing Units	
																								□ A.U. *	XS-557-1B		
113-1	Air Purification Equipment -AGGLOMERATOR-	Control Building Air Purification Room		1	120	Panel G-1			E4,E14, 81															□ Panel G-1 *	SS-113-1	Disconnect Switch	
																								□ [6] *	S-113-1AA	Switch	
																								□ [6] *	S-113-1AB	Switch	
																			□ Air Pur. Room [6] *						L-113-1AB	Red "Unit Energized"	
																									L-113-1AA	Red "Unit Energized"	
																								□ [6] *	S-113-1BA	Switch	
																								Air Pur. Room	S-113-1BB	Switch	
																			□ Air Pur. Room [6] *						L-113-1BB	Red "Unit Energized"	
																									L-113-1BA	Red "Unit Energized"	
																								□ [6] *	E-113-1	Power Pack	
																								Air Pur. Room	TFR-113-1	Agglomerator	
114-1	Instrument Air Compressor #1	East Gallery	7½HP	3	480	MCC 12			E6,E14, 80	MCC 12			A.U.					□ A.U. *	MCC 12		□ A.U. *			A.U. *	X-114-1	Control Panel	
																								□ A.U. *	681 CR	Control Relay	
																								□ A.U. *	A.T.S.	Air Temp. Switch	
																								A.U. *	O.P.S.	Oil Pressure Switch	
																								□ A.U. *	A.P.S.	Adjustable Air Pressure Switch	
																								□ A.U. *	S.P.V.	Solenoid Pilot Valve	
114-2	Instrument Air Compressor #2	East Gallery	7½HP	3	480	MCC 12			E6,E14, 80	MCC 12			A.U.					□ A.U. *	MCC 12		□ A.U. *			□ A.U. *	X-114-2	Control Panel	
																								□ A.U. *	682CR	Control Relay	
																								□ A.U. *	A.T.S.	Air Temp. Switch	
																								□ A.U. *	O.P.S.	Oil Pressure Switch	
																								□ A.U. *	A.P.S.	Adjustable Air Pressure Switch	
																								□ A.U. *	S.P.V.	Solenoid Pilot Valve	
115-1	Instrument Air Dryer	East Gallery	1/2HP	1	120	Panel L2A			E6,E14, 81				A.U.														
121-1	Overhead Door	Garage	1/2HP	3	480	MCC 12			E4,E14, 80	MCC 12														A.U.	L.O.Stop	Lock-Out Stop Pushbutton	
																								[5]	PB-Open	Open Pushbutton	
																								[5]	PB-Close	Close Pushbutton	
																								□ [5] *	LS-Open	Open Limit Switch	
																								□ [5] *	LS-Close	Close Limit Switch	
122-1	Hoist	Raw Sewage Pumping Station Chlorine Storage Room	2½HP 3/4HP	3	480	MCC 21			E9,E14, 80				A.U.														
123-1	Plant Air Compressor #1	East Gallery	7½HP	3	480	MCC 12			E6,E14, 81	MCC 12			A.U.				A.U.		MCC 12					MCC 12	Stop P.B.	Stop Pushbutton	
																								□ A.U. *	X-123-1	Alternator	See Note #1
																								□ A.U. *	PS-A	Lead Pressure Sw.	
																								□ A.U. *	721CR	Control Relay	See Note #1
123-2	Plant Air Compressor #2	East Gallery	7½HP	3	480	MCC 12			E6,E14, 81	MCC 12			A.U.				A.U.		MCC 12					MCC 12	Stop P.B.	Stop Pushbutton	
																								□ A.U. *	X-123-1	Alternator	See Note #1
																								□ A.U. *	PS-B	Lag Pressure Switch	
																								□ A.U. *	722 CR	Control Relay	See Note #1
124-1	Plant Air Dryer	East Gallery	1/2HP	1	120	Panel L2A			E6,E14, 80				A.U.														
125-1	Mechanical Bar Screen	Raw Sewage Pumping Station Comminutor Rm.	1HP	3	480	MCC 21			E9,E14, 81	MCC 21			A.U.			MCC 21	A.U.	MCC 21	MCC 21	MCC 21	MCC 21						
126-1	Air Diffuser Hoist	Aeration Tanks	3/4HP	3	480	LPH-2			E3,E14, 80																		
127-1, 2	Alum Pumps	Basement Chem. Bldg.	1/3HP	D.C. Voltage From Alum Pn.					E-6																	Cont's in Alum Panel	
128-1	Vibrator Motor	Chem Bldg.	1/4HP	1	120	Polm Pn.			E-11																	Cont's in Polymer Center	
128-2	Mixer	Chem Bldg.	3/4	3	480	Polm Pn.			E-11																	Cont's in Polymer Center	
128-3	Transfer Pump	Chem Bldg.	1.5HP	3	480	Polm Pn.			E-11																	Cont's in Polymer Center	
128-4, 5	Feed Pumps	Basement Chem. Bldg.	3/4HP	3	480	Polm Pn.			E-6								A.U.									Cont's in Polymer Center	
127	Feeder Bkr.	MCC-15							E-4, 11																	Branch Feeder to 127	
128	Feeder Bkr.	MCC-15							E-11																	Branch Feeder to 128	

Notes:
1. One Alternator required for both Compressors - contains both 721CR & 722CR

SEE ITE MCC DWG'S

ROBSON & WOESE INC.
CONSULTING ENGINEERS
SYRACUSE NEW YORK

REVISIONS

ONONDAGA COUNTY DEPARTMENT OF PUBLIC WORKS
DIVISION OF DRAINAGE AND SANITATION
BREWERTON WATER POLLUTION CONTROL PLANT

EQUIPMENT & CONTROL SCHEDULE

ELECTRICAL

TOWN OF CICERO — ONONDAGA CO., N.Y.

BARTON, BROWN, CLYDE & LOGUIDICE
CONSULTING ENGINEERS & LAND SURVEYORS
NORTH SYRACUSE, NEW YORK

DATE: FEBRUARY 1975
SCALE: NONE
FILE NO.: 55.32-111F

E-17

IN CHARGE OF: F.A.L.
DESIGNED BY: W.K.
DRAWN BY: J.P.S.
CHECKED BY: GCR

Legend:
- * Supplied by Others
- □ Mounted by Others
- [1] Room Number

ELECTRICAL EQUIPMENT AND CONTROL SCHEDULE

EQUIPMENT						SUPPLY				CONTROLS MOUNTED AS SCHEDULED AND AS SHOWN ON PLANS BY ¢ AND/OR ITEM NUMBER												AUXILIARIES				
ITEM NUMBER △	NAME	LOCATION	HORSE POWER OR WATTS	PHASE	VOLTS	PANEL OR CONTROL CENTER	CIRCUIT BREAKER	CONDUIT SCHEDULE DWG. No.	REFERENCE DRAWINGS	COMBINATION MAGNETIC STARTER	MANUAL MOTOR STARTER	MAGNETIC CONTACTOR	DISCONNECT SWITCH	COMBINATION MAGNETIC CONTACTOR	START-STOP PUSHBUTTON	START-STOP LOCKOUT PUSHBUTTON	3-POSITION SELECTOR SW.	PILOT LIGHT	ELAPSED TIME METER	TIME DELAY RELAY	TIMER	ELECTRIC THERMOSTAT	MISCELLANEOUS	ITEM NUMBER	DESCRIPTION	REMARKS
129-1	Overhead Door	Chemical Building 1st. Floor	1HP	3	480	MCC 15			E11,E14, 80	MCC 15													A.U. [21] [21] □A.U.* □A.U.*	L.O. Stop PB.-Open PB.-Close LS-Open LS-Close	Lockout Stop P.B. Open Pushbutton Close Pushbutton Open Limit Switch Close Limit Switch	
129-2	Overhead Door	Chemical Building 1st. Floor	1HP	3	480	MCC 15			E11,E14, 80	MCC 15													A.U. [21] [21] □A.U.* □A.U.*	L.O. Stop PB-Open PB-Close L.S.-Open L.S.-Close	Lockout Stop P.B. Open Pushbutton Close Pushbutton Open Limit Switch Close Limit Switch	
213-1	WATER COOLER	RAW SEWAGE PUMP STAT. MOTOR CONT. RM.	1/6HP	1	120	PN L-4			E-9 E-14																	
212-1	HOT WATER HEATER	EAST GALLERY	1.5 KW	1	120	PN L-1			E-6 E-14				A.U.													
203-1	Effluent Water Supply Pump #1	Raw Sewage Pumping Station Pump Room	5HP	3	480	MCC 21			E9,E14, P8	MCC 21					MCC 21	A.U.	MCC 21	MCC 21	MCC 21	MCC 21						See Note #1
203-2	Effluent Water Supply Pump #2	Raw Sewage Pumping Station Pump Room	15 HP	3	480	MCC 21			E9,E14, P8	MCC 21					MCC 21	A.U.	MCC 21	MCC 21	MCC 21	MCC 21						See Note #1
203-3	Effluent Water Supply Pump #3	Raw Sewage Pumping Station Pump Room	15 HP	3	480	MCC 21			E9,E14, P8	MCC 21					MCC 21	A.U.	MCC 21	MCC 21	MCC 21	MCC 21						See Note #1
205-1	Sump Pump	Control Building Basement	1/2HP	1	240	Panel L2A			E6,E14				A.U.													
206-1	Sump Pump	Aeration Tanks East Gallery	1/2HP	1	240	Panel L2A			E6,E14				A.U.													
207-1	Sump Pump	Raw Sewage Pumping Station Pump Room	1/2HP	1	240	Panel L-4			E9,E14				A.U.													
208-1	Hot Water Heater	Control Building Basement	5.0KW	1	240	Panel L-1			E6,E14				A.U.													
209-1	Hot Water Heater	Raw Sewage Pumping Station Motor Room	1.5KW	1	120	Panel L-4			E9,E14				A.U.													
210-1	Water Cooler	Control Building Control Room	1/6HP	1	120	Panel L-2			E4,E14																	
211-1	Hot Water Heater	Chemical Bldg. 1st. Floor	1.5KW	1	120	Panel L-5			E11,E14				A.U.													
301-1	Heater	Control Bldg. Control Room	7.5KW	3	480	MCC 12			E4,E14			A.U.										[1]				
301-2	Heater	Control Bldg. Control Room	10.0KW	3	480	MCC 13			E4,E14			A.U.										[1]				
301-3	Heater	Control Bldg. Control Room	7.5KW	3	480	MCC 13			E4,E14			A.U.										[1]				
301-4	Heater	Control Bldg. Control Room	10.0KW	3	480	MCC 12			E4,E14			A.U.										[1]				
302-1	Heater	Control Bldg. Foyer	3.0KW	3	480	MCC 12			E4,E14			A.U.										[2]				
302-2	Heater	Control Bldg. Foyer	3.0KW	3	480	MCC 12			E4,E14			A.U.										[2]				
303-1	Heater	Control Bldg. Toilet	5.0KW	3	480	MCC 13			E4,E14			A.U.										[3]				
304-1	Heater	Control Bldg. Janitor Room	5.0KW	3	480	MCC 13			E4,E14			A.U.										[4]				
305-1	Heater	Control Bldg. Garage	10.0KW	3	480	MCC 13			E4,E14			A.U.	A.U.									[5]				
305-2	Heater	Control Bldg. Garage	10.0KW	3	480	MCC 13			E4,E14			A.U.	A.U.									[5]				
305-3	Heater	Control Bldg. Garage	10.0KW	3	480	MCC 13			E4,E14			A.U.	A.U.									[5]				
305-4	Heater	Control Bldg. Garage	12.5KW	3	480	MCC 13			E4,E14			A.U.	A.U.									[5]				
305-5	Heater	Control Bldg. Garage	10.0KW	3	480	MCC 12			E4,E14			A.U.	A.U.									[5]				
306-1	Heater	Control Building Blower Room	12.5KW	3	480	MCC 12			E4,E14			A.U.	A.U.									[6]				
306-2	Heater	Control Building Blower Room	12.5KW	3	480	MCC 13			E4,E14			A.U.	A.U.									[6]				
306-3	Heater	Control Building Blower Room	12.5KW	3	480	MCC 13			E4,E14			A.U.	A.U.									[6]				
307-1	Heater	Control Building Basement	18.0KW	3	480	MCC 13			E6,E14			A.U.	A.U.									[7]				
307-2	Heater	Control Building Basement	10.0KW	3	480	MCC 12			E6,E14			A.U.	A.U.									[7]				
309-1	Heater	East Gallery	10.0KW	3	480	MCC 12			E6,E14			A.U.	A.U.									[9]				
309-2	Heater	East Gallery	12.5KW	3	480	MCC 12			E6,E14			A.U.	A.U.									[9]				
311-1	Heater	North Gallery	12.5KW	3	480	MCC 13			E7,E14			A.U.	A.U.									[11]				
311-2	Heater	North Gallery	12.5KW	3	480	MCC 13			E7,E14			A.U.	A.U.									[11]				
311-3	Heater	North Gallery	12.5KW	3	480	MCC 13			E7,E14			A.U.	A.U.									[11]				
311-4	Heater	North Gallery	12.5KW	3	480	MCC 12			E7,E14			A.U.	A.U.									[11]				
312-1	Heater	South Gallery	12.5KW	3	480	MCC 13			E7,E14			A.U.	A.U.									[12]				
312-2	Heater	South Gallery	12.5KW	3	480	MCC 13			E7,E14			A.U.	A.U.									[12]				
312-3	Heater	South Gallery	12.5KW	3	480	MCC 13			E7,E14			A.U.	A.U.									[12]				
312-4	Heater	South Gallery	12.5KW	3	480	MCC 12			E7,E14			A.U.	A.U.									[12]				
313-1	Heater	Raw Sewage Pumping Station Motor Control Rm.	7.5KW	3	480	MCC 23			E9,E14			A.U.										[13]				
313-2	Heater	Raw Sewage Pumping Station Motor Control Rm.	7.5KW	3	480	MCC 21			E9,E14			A.U.										[13]				
313-3	Heater	Raw Sewage Pumping Station Motor Control Rm.	7.5KW	3	480	MCC 23			E9,E14			A.U.										[13]				
314-1	Heater	Raw Sewage Pumping Station Motor Room	7.5KW	3	480	MCC 21			E9,E14			A.U.	A.U.									[14]				
314-2	Heater	Raw Sewage Pumping Station Motor Room	7.5KW	3	480	MCC 23			E9,E14			A.U.	A.U.									[14]				
315-1	Heater	Raw Sewage Pumping Station Pump Room	7.5KW	3	480	MCC 21			E9,E14			A.U.	A.U.									[15]				
315-2	Heater	Raw Sewage Pumping Station Pump Room	7.5KW	3	480	MCC 23			E9,E14			A.U.	A.U.									[15]				
316-1	Heater	Raw Sewage Pumping Station Storage Room	5.0KW	3	480	MCC 23			E9,E14			A.U.	A.U.									[16]				
317-1	Heater	Raw Sewage Pumping Station Grit Removal Room	6.0KW	3	480	MCC 21			E9,E14					MCC 21								[17]				
317-2	Heater	Raw Sewage Pumping Station Grit Removal Room	6.0KW	3	480	MCC 23			E9,E14					MCC 23								[17]				
317-3	Heater	Raw Sewage Pumping Station Grit Removal Room	6.0KW	3	480	MCC 21			E9,E14					MCC 21								[17]				
317-4	Heater	Raw Sewage Pumping Station Grit Removal Room	6.0KW	3	480	MCC 23			E9,E14					MCC 23								[17]				
317-5	Heater	Raw Sewage Pumping Station Grit Removal Room	6.0KW	3	480	MCC 23			E9,E14					MCC 23								[17]				
317-6	Heater	Raw Sewage Pumping Station Grit Removal Room	6.0KW	3	480	MCC 23			E9,E14					MCC 23								[17]				
317-7	Heater	Raw Sewage Pumping Station Grit Removal Room	6.0KW	3	480	MCC 21			E9,E14					MCC 21								[17]				
318-1	Heater	Raw Sewage Pumping Station Comminutor Rm.	6.0KW	3	480	MCC 23			E9,E14					MCC 23								[18]				
318-2	Heater	Raw Sewage Pumping Station Comminutor Rm.	6.0KW	3	480	MCC 23			E9,E14					MCC 23								[18]				
318-3	Heater	Raw Sewage Pumping Station Comminutor Rm.	6.0KW	3	480	MCC 23			E9,E14					MCC 23								[18]				
318-4	Heater	Raw Sewage Pumping Station Comminutor Rm.	6.0KW	3	480	MCC 23			E9,E14					MCC 23								[18]				

Notes:

1. Plumbing Contractor Supplies & Mounts Items PS-612-1, PC-612-1, 1406CR & 1410 CR.

SEE ITE MCC DWG'S

IN CHARGE OF: F.A.L.
DESIGNED BY: W.K.
DRAWN BY: J.P.S.
CHECKED BY: BCR

ROBSON & WOESE INC.
CONSULTING ENGINEERS
SYRACUSE NEW YORK

REVISIONS

ONONDAGA COUNTY DEPARTMENT OF PUBLIC WORKS
DIVISION OF DRAINAGE AND SANITATION
BREWERTON WATER POLLUTION CONTROL PLANT

EQUIPMENT & CONTROL SCHEDULE

ELECTRICAL

TOWN OF CICERO — ONONDAGA CO., N.Y.

BARTON, BROWN, CLYDE & LOGUIDICE
CONSULTING ENGINEERS & LAND SURVEYORS
NORTH SYRACUSE, NEW YORK

DATE: FEBRUARY 1975
SCALE: NONE
FILE NO.: 55.32-112F

E-18

Legend:
- * Supplied by Others
- □ Mounted by Others
- [1] Room Number

ELECTRICAL EQUIPMENT AND CONTROL SCHEDULE

EQUIPMENT						SUPPLY				CONTROLS — MOUNTED AS SCHEDULED AND AS SHOWN ON PLANS BY ¢ AND/OR ITEM NUMBER																	REMARKS
														AUXILIARIES													
ITEM NUMBER △	NAME	LOCATION	HORSE POWER OR WATTS	PHASE	VOLTS	PANEL OR CONTROL CENTER	CIRCUIT BREAKER	CONDUIT SCHEDULE DWG. No.	REFERENCE DRAWINGS	COMBINATION MAGNETIC STARTER	MANUAL MOTOR STARTER	MAGNETIC CONTACTOR	DISCONNECT SWITCH	START-STOP W/ PILOT LIGHT	START-STOP PUSHBUTTON	START-STOP LOCKOUT PUSHBUTTON	3-POSITION SELECTOR SWITCH	PILOT LIGHT	ELAPSED TIME METER	TIME DELAY RELAY	MANUAL MOTOR CONTROLLER	LOUVER CONTROL STATION	ELECTRIC THERMOSTAT	MISCELLANOUS	ITEM NUMBER	DESCRIPTION	
318-5	Heater	Raw Sewage Pumping Station Comminutor Room	6.0KW	3	480	MCC 23			E9,E14			MCC 23											[18]				
318-6	Heater	Raw Sewage Pumping Station Comminutor Room	6.0KW	3	480	MCC 23			E9,E14			MCC 23											[18]				
318-7	Heater	Raw Sewage Pumping Station Comminutor Room	6.0KW	3	480	MCC 23			E9,E14			MCC 23											[18]				
319-1	Heater	Raw Sewage Pumping Station Chlorination Rm.	15.0KW	3	480	MCC 23			E9,E14			A.U.	A.U.										[19]				
319-2	Heater	Raw Sewage Pumping Station Chlorination Rm.	15.0KW	3	480	MCC 21			E9,E14			A.U.	A.U.										[19]				
320-1	Heater	Raw Sewage Pumping Station Chlorine Storage Rm.	20.0KW	3	480	MCC 23			E9,E14			A.U.	A.U.										[20]				
320-2	Heater	Raw Sewage Pumping Station Chlorine Storage Rm.	20.0KW	3	480	MCC 21			E9,E14			A.U.	A.U.										[20]				
320-3	Heater	Raw Sewage Pumping Station Chlorine Storage Rm.	20.0KW	3	480	MCC 23			E9,E14			A.U.	A.U.										[20]				
320-4	Heater	Raw Sewage Pumping Station Chlorine Storage Rm.	20.0KW	3	480	MCC 21			E9,E14			A.U.	A.U.										[20]				
321-1	Heater	1 St. Floor Chemical Bldg.	12.5KW	3	480	MCC 15			E11,E14			A.U.											[21]				
321-2	Heater	1st. Floor Chemical Bldg.	12.5KW	3	480	MCC 15			E11,E14			A.U.											[21]				
321-3	Heater	1st. Floor Chemical Bldg.	12.5KW	3	480	MCC 15			E11,E14			A.U.											[21]				
321-4	Heater	1st Floor Chemical Bldg.	12.5KW	3	480	MCC 15			E11,E14			A.U.											[21]				
322-1	Heater	2nd. Floor Chemical Bldg.	7.5KW	3	480	MCC 15			E11,E14			A.U.	A.U.										[22]				
322-2	Heater	2nd. Floor Chemical Bldg.	7.5KW	3	480	MCC 15			E11,E14			A.U.	A.U.										[22]				
322-3	Heater	2nd. Floor Chemical Bldg.	7.5KW	3	480	MCC 15			E11,E14			A.U.	A.U.										[22]				
322-4	Heater	2nd. Floor Chemical Bldg.	7.5KW	3	480	MCC 15			E11,E14			A.U.	A.U.										[22]				
401-1F 401-1D	Fan Damper	Control Building Control Room	1/4HP	1	120	Panel L2A			E4,E14, V-4		[1]																
401-2L	Louver	Control Building Control Room		1	120	Panel L2A			E4,E14, V4													[1]				FCC-Unit	
403-1F	Fan	Control Building Toilet	1/6HP	1	120	Panel L2A			E4,E14, V4		[3]																
405-1L 405-2L	Wall Louver Wall Louver	Control Building Garage		1	120	Panel L2A			E4,E14, V4													[5]				FCC-Unit	
405-3F 405-3D	Fan Damper	Control Building Garage	3/4HP	3 1	480 120	MCC 12 Panel L2A			E4,E14, V4	MCC 12					[5]			MCC 12								Interlock with FCC-unit for Louvers 405-1L & 2L	
405-4D 405-5D	Damper Damper	Control Building Garage		1	120	Panel L2A			E4,E14, E12																		
405-6L 405-7L 405-8L 405-9L 405-10L 405-11L	Wall Louver Wall Louver Wall Louver Wall Louver Wall Louver Wall Louver	Control Building Garage		1	120	Panel L2A			E4,E14, E12													[5]				FCC-Unit	
406-1F 406-1D	Fan Damper	Control Building Blower Room	1/2HP	3 1	480 120	MCC 12 Panel L2A			E4,E14, V4	MCC 12					See Note 1			MCC 12						□ L.S.*		Limit Switch	
406-2F 406-2D	Fan Damper	Control Building Blower Room	1/2HP	3 1	480 120	MCC 12 Panel L2A			E4,E14, V4	MCC 12					[6]			MCC 12		MCC 12			[6]	□ L.S.*		Limit Switch	
406-3F 406-3D	Fan Damper	Control Building Blower Room	1/2HP	3 1	480 120	MCC 12 Panel L2A			E4,E14, V4	MCC 12					[6]			MCC 12		MCC 12			[6]	□ L.S.*		Limit Switch	
406-4F 406-4D	Fan Damper	Control Building Blower Room	2HP	3 1	480 120	MCC 12 Panel L2A			E4,E14, V4	MCC 12					[6]			MCC 12		MCC 12							
406-5F 406-5D	Fan Damper	Control Building Blower Room	2HP	3 1	480 120	MCC 12 Panel L2A			E4,E14, V4	MCC 12					[6]			MCC 12		MCC 12							
406-6L 406-7L 406-8L 406-9L	Wall Louver Wall Louver Wall Louver Wall Louver	Control Building Blower Room		1	120	Panel L2A			E4,E14, V4													[6]				FCC-Unit	
411-1F 411-1D	Fan Damper	Aeration Tanks North Gallery	3/4HP	3 1	480 120	MCC 13 Panel L-1			E7,E14, V4	MCC 13					See Note 1			MCC 13									
411-2F 411-2D	Fan Damper	Aeration Tanks North Gallery	3/4HP	3 1	480 120	MCC 13 Panel L-1			E7,E14, V4	MCC 13					See Note 1			MCC 13						□ L.S.*		Limit Switch	
412-1F 412-1D	Fan Damper	Aeration Tanks South Gallery	3/4HP	3 1	480 120	MCC 13 Panel L-1			E7,E14, V4	MCC 13					See Note 1			MCC 13									
412-2F 412-2D	Fan Damper	Aeration Tanks South Gallery	3/4HP	3 1	480 120	MCC 13 Panel L-1			E7,E14, V4	MCC 13					See Note 1			MCC 13						□ L.S.*		Limit Switch	
413-1F 413-1D	Fan Damper	Raw Sewage Pumping Station Motor Control Room	1/2HP	3 1	480 120	MCC 21 Panel L-4			E9,E14, V4	MCC 21					MCC 21			MCC 21								Interlock with FCC-unit for Louver 413-2L	
413-2L	Wall Louver	Raw Sewage Pumping Station Motor Control Room		1	120	Panel L-4			E9,E14, V4													[13]				FCC-Unit	
416-1F 416-1D	Fan Damper	Raw Sewage Pumping Station Storage Room	1/6HP	1	120	Panel L-4			E9,E14, V4		[16]																
417-1F 417-1D	Fan Damper	Raw Sewage Pumping Station Grit Removal Room	3HP	3 1	480 120	MCC 21 Panel L-4			E9,E14, V4	MCC 21					MCC 21	[17]	MCC 21	MCC 21		MCC 21				MCC 21	All Start	All Start Pushbutton See Note 2	
417-2F 417-2D	Fan Damper	Raw Sewage Pumping Station Grit Removal Room	1HP	3 1	480 120	MCC 21 Panel L-4			E9,E14, V4	MCC 21					MCC 21	[17]	MCC 21	MCC 21		MCC 21				□ L.S.* MCC 21	All Start	Limit Switch All Start Pushbutton See Note 2	
417-3F 417-3D	Fan Damper	Raw Sewage Pumping Station Grit Removal Room	1HP	3 1	480 120	MCC 21 Panel L-4			E9,E14, V4	MCC 21					MCC 21	[17]	MCC 21	MCC 21		MCC 21				□ L.S.* MCC 21	All Start	Limit Switch All Start Pushbutton See Note 2	
419-1F 419-1D	Fan Damper	Raw Sewage Pumping Station Chlorination Room	1/2HP	3 1	480 120	MCC 21 Panel L-4			E9,E14, V4	MCC 21				[19] [19]				MCC 21						□ L.S.*		Limit Switch	
419-2F 419-2D	Fan Damper	Raw Sewage Pumping Station Chlorination Room	1/2HP	3 1	480 120	MCC 21 Panel L-4			E9,E14, V4	MCC 21				[19] [19]				MCC 21									
420-1F 420-1D	Fan Damper	Raw Sewage Pumping Station Chlorine Storage Room	1HP	3 1	480 120	MCC 21 Panel L-4			E9,E14, V4	MCC 21				[20] [19]				MCC 21									
420-2F 420-2D	Fan Damper	Raw Sewage Pumping Station Chlorine Storage Room	1HP	3 1	480 120	MCC 21 Panel L-4			E9,E14, V4	MCC 21				[20] [19]				MCC 21									
420-3F 420-3D	Fan Damper	Raw Sewage Pumping Station Chlorine Storage Room	1HP	3 1	480 120	MCC 21 Panel L-4			E9,E14, V4	MCC 21				[20] [19]				MCC 21									
420-4F 420-4D	Fan Damper	Raw Sewage Pumping Station Chlorine Storage Room	1/2HP	3 1	480 120	MCC 21 Panel L-4			E9,E14, V4	MCC 21				[20] [19]				MCC 21						□ L.S.*		Limit Switch	
420-5F 420-5D	Fan Damper	Raw Sewage Pumping Station Chlorine Storage Room	1/2HP	3 1	480 120	MCC 21 Panel L-4			E9,E14, V4	MCC 21				[20] [19]				MCC 21						□ L.S.*		Limit Switch	

Notes:
1. Six pole "Start-Stop" Pushbutton, one in East Gallery & one in Control Building Basement, contacts of which appear in 406-1, 422-2, 411-1, 411-2, 412-1 & 412-2 control circuits.
2. Multi-contact "All Start" Pushbutton in MCC-21, contacts of which appear in 417-1, 417-2 & 417-3 control circuits.

SEE ITE MCC DWG'S

IN CHARGE OF: F.A.L.
DESIGNED BY: W.K.
DRAWN BY: J.P.S.
CHECKED BY: BCR

ROBSON & WOESE INC.
CONSULTING ENGINEERS
SYRACUSE NEW YORK

REVISIONS

ONONDAGA COUNTY DEPARTMENT OF PUBLIC WORKS
DIVISION OF DRAINAGE AND SANITATION
BREWERTON WATER POLLUTION CONTROL PLANT

EQUIPMENT & CONTROL SCHEDULE
ELECTRICAL

TOWN OF CICERO — ONONDAGA CO., N.Y.

BARTON, BROWN, CLYDE & LOGUIDICE
CONSULTING ENGINEERS & LAND SURVEYORS
NORTH SYRACUSE, NEW YORK

DATE: FEBRUARY 1975
SCALE: NONE
FILE NO.: 55.32-113F

E-19

ELECTRICAL EQUIPMENT AND CONTROL SCHEDULE

Legend:
* Supplied by Others
D Mounted by Others
[/] Room Number

ITEM NUMBER △	NAME	LOCATION	HORSE POWER OR WATTS	PHASE	VOLTS	SUPPLY: PANEL OR CONTROL CENTER	SUPPLY: CIRCUIT BREAKER	SUPPLY: CONDUIT SCHEDULE DWG. No.	REFERENCE DRAWINGS	MOUNTED: COMBINATION MAGNETIC STARTER	MOUNTED: MANUAL MOTOR STARTER	MOUNTED: COMBINATION MAGNETIC CONTACTOR	MOUNTED: DISCONNECT SWITCH	AUXILIARIES: START-STOP W/ PILOT LIGHT	AUXILIARIES: START-STOP PUSHBUTTON	AUXILIARIES: START-STOP LOCKOUT PUSHBUTTON	AUXILIARIES: 3-POSITION SELECTOR SW.	AUXILIARIES: PILOT LIGHT	AUXILIARIES: ELAPSED TIME METER	AUXILIARIES: TIME DELAY RELAY	AUXILIARIES: LOUVER CONTROL STATION	AUXILIARIES: MISCELLANEOUS	AUXILIARIES: ITEM NUMBER	AUXILIARIES: DESCRIPTION	REMARKS
420-4F	Fan	Raw Sewage Pump Station Chlorine Storage Room	¾HP	3	480	MCC 21 Panel L-4	20A 1P		E3, E4, M4	MCC 21				[12] [20]				MCC 21							
420-4D	Damper			1	120																				
421-1L	Louver	Chemical Bldg.		1	120	Panel L-5	20A 1P		E11, E4, M4												[21]				
421-2L	Louver	Chemical Bldg.																							
422-1F	Fan	Chemical Bldg.	1 HP	3	480	MCC 15 Panel E-5	20A 1P		E11, E4, M4	MCC 15								MCC 15						Interlock with FCC unit for Louvers 421-1L & 2L	FCC Unit
422-1D	Damper			1	120																				
422-2F	Fan	Chemical Bldg.	1 HP	3	480	MCC 12 Panel L-2A	20A 1P		E11, E4, M4	MCC 12								MCC 12							
422-2D	Damper			1	120																				
FE-5061	Magnetic Flow Meter	Aeration Tanks East Gallery		1	120				E6, E4, M4															See Note #1	
FE-5062	Magnetic Flow Meter	Aeration Tanks East Gallery		1	120	Panel L2B	20A 1P		E6, E4, M4																
FIT-5061	Transmitter	Panel E East Gallery		1	120	FE-5061			E6, E4, M4																
FIT-5062	Transmitter	Panel E East Gallery		1	120	FE-5062			E6, E4, M4																
AE-531-1	D.O. Analyzer Probe	Mixed Liquor Tank #1		1	120	Panel A-3			E3, E4, M4																
AE-531-2	D.O. Analyzer Probe	Mixed Liquor Tank #2		1	120	Panel A-3			E3, E4, M4																
AE-532-1	D.O. Analyzer Probe	Sludge Aeration Tank #1		1	120	Panel A-3			E5, E4, M4																
AE-532-2	D.O. Analyzer Probe	Sludge Aeration Tank #2		1	120	Panel A-3			E3, E4, M4																
PC-641-1	Effluent Water Supply Pressure Control	Raw Sewage Pumping Station Pump Room		1	120	Panel L-4	20A 1P		E3, E4, M4 Pg 9																
Systems 1001, 1002, 1003, 1004, 1005	Pumping Stations Alarms	Instrument Panel A-1		1	120	Panel L2B	20A 1P		E4, E4, M4 87																
Systems 1055, 1056, 1356, 1456, 1556	Pumping Stations Sewage Flow Recording	Instrument Panel A-1		1	120	Panel L2B	20A 1P		E4, E4, M4 82																
System-510	Plant Program Control	Instrument Panel A-3		1	120	Panel L2B	20A 1P		E4, E4, M4 89																
System-511	Train #1 Program Control	Instrument Panel A-3		1	120	Panel L2B	20A 1P		E4, E4, M4 89																
System-511-2	Train #2 Program Control	Instrument Panel A-3		1	120	Panel L2B	20A 1P		E4, E4, M4 89																
Systems-535, 532	D.O. Analysis	Instrument Panel A-3		1	120	Panel L2B	20A 1P		E4, E4, M4 88																
System-548-1A, 1B	Plant Annunciator	Instrument Panels A-4 & A-5		1	120	Panel L2B	20A 1P		E4, E4, M4 90																
System 526	Flow Recorder	Instrument Panel A-5		1	120				E4, E4, M4 90																
System 527	Aeration Blower Operation Control	Instrument Panel A-5		1	120	Panel L-3	20A 1P		E4, E4, M4 90																
K-547-1	Time	Instrument Panel A-2		1	120	Panel L2B	20A 1P		E4, E4, M4 90																
System-1001-1002	Alarm Transmission Brewerton to Metro	Instrument Panel A-2		1	120	Panel L2B	20A 1P		E4, E4, M4 85																
System-1004-1003	Alarm Transmission Brewerton-Pumping Stations	Instrument Panel A-2		1	120	Panel L2B	20A 1P		E4, E4, M4 83, 84																
Systems-504, 507, 515, 518, 519, 520, 523	Flow Recorders	Instrument Panel A-3		1	120	Panel L2B	20A 1P		E4, E4, M4																
	Paging System	Control Bldg. Control Room		1	120	Panel L2B	20A 1P		E4, E4, M4																
702-1	Fuel Transfer Pump	Garage	¼HP	3	480	MCC 12			E4, E4, M4	MCC 12															
	"LS" Fixtures			3	480	MCC 12			E1, E2, E4	MCC 12															
515-1 520-1 517-1A 517-1B 517-1C	MAGNETIC FLOW METERS	NORTH GALLERY		1	120	PN L-5	20A 1P		E-7 56 69 37																
515-2 520-2 517-2A 517-2B 517-2C	MAGNETIC FLOW METERS	SOUTH GALLERY		1	120	PN L-5	20A 1P		E-7 36 69 38																

Notes:
1. Both systems supplied from one breaker.
2. Interlock starter circuit to floatswitch LS-753-1 in day tank.

SEE ITE MCC DWG'S

ROBSON & WOESE INC.
CONSULTING ENGINEERS
SYRACUSE NEW YORK

ONONDAGA COUNTY DEPARTMENT OF PUBLIC WORKS
DIVISION OF DRAINAGE AND SANITATION
BREWERTON WATER POLLUTION CONTROL PLANT
EQUIPMENT & CONTROL SCHEDULE
ELECTRICAL
TOWN OF CICERO ONONDAGA CO., N.Y.

BARTON, BROWN, CLYDE & LOGUIDICE
CONSULTING ENGINEERS & LAND SURVEYORS
NORTH SYRACUSE, NEW YORK

DATE: FEBRUARY 1975
SCALE: NONE
FILE NO.: 5532-114F

REVISIONS

E20

IN CHARGE OF: F.M.L.
DESIGNED BY: W.K.
DRAWN BY: J.P.S.
CHECKED BY: B.C.R.

CONDUIT DATA		REFERENCE DATA	POWER WIRING IN CONDUIT			CONTROL WIRING IN CONDUIT			REMARKS	NOTES
CONDUIT NO	CONDUIT SIZE	ITEM NO'S ASSOCIATED WITH CONDUIT	REFERENCE DRAWING	QUANTITY OF CONDUCTORS	SIZE OF CONDUCTORS	CONDUIT OR WIRE SOURCE	QUANTITY OF CONDUCTORS	SIZE OF CONDUCTORS		
P-301-1	3/4	301-1	E-4	3	#12	MCC-12				
C-301-1	1/2	301-1	E-4				2	#12	FOR HEATER 301-1	
C-301-4	3/4	301-4	E-4	3	#12	MCC-12				
C-301-4	1/2	301-4	E-4				2	#12	FOR HEATER 301-4	
P-302-A	1 1/2	302-1, 302-2, 305-5, 306-1	E-4	6	#12 #10	MCC-12				
P-302-1	3/4	302-1	E-4	3	#12				FOR COVER, GARAGE & BLOWER RM. HEATERS	
C-302-1	1/2	302-1	E-4				2	#12	FOR HEATER 302-1	
P-302-B	1	302-2, 306-1	E-4	5	#12 #10					
P-302-2	3/4	302-2	E-4	3	#12					
C-302-2	1/2	302-2	E-4				2	#12	FOR HEATER 302-2	
P-305-5A	1"	305-5 GAS PUMP	E-4	3	#10 #12				FOR 1 302-2 THERMOSTAT	
P-305-5B	3/4	305-5	E-4	3	#12				FOR 05-305-5 & GAS PUMP	
C-305-5	1/2	305-5	E-4				2	#12	FOR HEATER 305-5	
P-306-1A	3/4	306-1	E-4	3	#10				FOR 1 305-5 THERMOSTAT	
P-306-1B	3/4	306-1	E-4	3	#12				FOR 05-306-1	
C-306-1	1/2	306-1	E-4				2	#12	FOR HEATER 306-1	
P-307-1A	3/4	307-1	E-6	3	#12	MCC-12			FOR 1 306-1 THERMOSTAT	
P-307-1B	3/4	307-1	E-6	3	#12				CONTROL RM. BASEMENT HEATER	
C-307-1	1/2	307-1	E-6				2	#12	FOR HEATER 307-1	
P-309	1 1/4	309-1, 2	E-6	6	#10				FOR 1 307-1 THERMOSTAT	
P-309-1A	3/4	309-1	E-6	3	#10				EAST GALLERY HEATERS	
P-309-1B	3/4	309-1	E-6	3	#12				FOR 05-309-1	
C-309-1	1/2	309-1	E-6				2	#12	FOR HEATER 309-1	
P-309-2A	3/4	309-2	E-6	3	#10				FOR 1 309-1 THERMOSTAT	
P-309-2B	3/4	309-2	E-6	3	#12				FOR 05-309-2	
C-309-2	1/2	309-2	E-6				2	#12	FOR HEATER 309-2	
P-311	1 1/4	311-4, 312-4	E-7	6	#10	MCC-12			FOR 1 309-2 THERMOSTAT	
P-311-4A	3/4	311-4	E-7	3	#10				FOR NORTH & SOUTH GALLERY HEATERS	
P-311-4B	3/4	311-4	E-7	3	#12				FOR 05-311-4	
C-311-4	1/2	311-4	E-7				2	#12	FOR HEATER 311-4	
P-312-4A	3/4	312-4	E-7	3	#10				FOR 1 311-4 THERMOSTAT	
P-312-4B	3/4	312-4	E-7	3	#12				FOR 05-312-4	
C-312-4	1/2	312-4	E-7				2	#12	FOR HEATER 312-4	
P-401-1A	3/4	401-1	E-4	2	#12	MCC-12 PNL L2A			FOR 1 312-4 THERMOSTAT	
P-401-1B	3/4	401-1	E-4	3	#12				FOR FAN 401-1 MOTOR CONTROLLER	
P-401-1D	1/2	401-1	E-4	2	#12				FOR FAN MOTOR 401-1F & DAMPER MOT 401-1D	
P-401-1F	1/2	401-1	E-4	2	#12				FOR DAMPER MOTOR 401-1D	
C-401-2A	1/2	401-2L	E-4				3	#12	FOR FAN MOTOR 401-1F	
C-401-2B	1/2	401-2L	E-4				3	#12	FOR FCC UNIT	
P-403-1A	1/2	403-1	E-4	2	#12	MCC-12 PNL L2A			FOR LOUVER 401-2L	
P-403-1B	3/4	403-1	E-4	3	#12				FOR TOILET RM. FAN MOTOR CONTROLLER	
P-403-1D	1/2	403-1	E-4	2	#12				FOR FAN & DAMPER 403-1F, 403-1D	
P-403-1F	1/2	403-1	E-4	2	#12				FOR DAMPER MOTOR 403-1D	
RC-405-3	1 1/4	405-3	E-4	5	#12	MCC-12			FOR FAN MOTOR 403-1F	
P-405-3A	3/4	405-3	E-4	3	#12				FOR GARAGE FAN 405-3	
P-405-3B	1/2	405-3	E-4	2	#12				FOR FAN MOTOR 405-3F	
C-405-3A	1/2	405-3	E-4				4	#12	FOR DAMPER MOTOR 405-3D	
C-405-3B	1/2	405-1L, 2L	E-4				3	#12	FOR PB-405-3	
C-405-3C	1/2	405-1L	E-4				3	#12	FOR FCC UNIT	
C-405-3D	1/2	405-2L	E-4				3	#12	FOR LOUVER 405-1L	
P-405-5A	1/2	405-5D	E-4	2	#12	MCC-12 PNL L2A			FOR LOUVER 405-2L	
P-405-5B	1/2	405-4D	E-4	2	#12				FOR DAMPER 405-5D, WIRE CIRCUIT THRU RELAY CONT. IN GENERATOR CONTROL CABINET.	
P-FCC	1/2	405-4L-11L	E-4	3	#12	MCC-12 PNL L2A			FOR DAMPER 405-4D	
P-405-L	3/4	405-4L-11L	E-4	3	#12				FOR FCC UNIT & LOUVERS 405-4L-11L, WIRE CIR. THRU 222 FCC CONTROL CABINET	
C-752-1	1/2	REV. 752-1	E-4				2	#12	FOR LOUVERS 405-4L THRU 405-11L	
PC-406-2	1 1/4	406-2	E-4	5	#12	MCC-12			FOR 752 CONTROL VALVE REV. CIRCUIT WIRE CIRCUIT THRU 222 FCC CONTROL CABINET	
P-406-2A	3/4	406-2	E-4	3	#12				FOR BLOWER RM. FAN 406-2	
P-406-2B	1/2	406-2	E-4	2	#12				FOR FAN MOTOR 406-2F	
C-406-2A	1/2	406-2	E-4				2	#12	FOR DAMPER MOTOR 406-2D	
C-406-2B	1/2	406-2	E-4				3	#12	FOR LIMIT SW. LS-406-2	
C-406-2C	1/2	406-2	E-4				2	#12	FOR PB-406-2	
RC-406-3	1 1/4	406-3	E-4	5	#12	MCC-12			FOR TE 406-2 THERMOSTAT	
P-406-3A	3/4	406-3	E-4	3	#12				FOR BLOWER RM. FAN 406-3	
P-406-3B	1/2	406-3	E-4	2	#12				FOR FAN MOTOR 406-3F	
C-406-3A	1/2	406-3	E-4				2	#12	FOR DAMPER MOTOR 406-3D	
C-406-3B	1/2	406-3	E-4				3	#12	FOR LIMIT SW. LS-406-3	
C-406-3C	1/2	406-3	E-4				2	#12	FOR PB-406-3	
RC-406-4	1 1/4	406-4	E-4	5	#12	MCC-12			FOR TE-406-3 THERMOSTAT	
P-406-4A	3/4	406-4	E-4	3	#12				FOR BLOWER RM. FAN 406-4	
C-406-4A	1/2	406-4	E-4	2	#12				FOR FAN MOTOR 406-4F	
C-406-4B	3/4	406-4	E-4				3	#12	FOR PB 406-4	
C-406-4C	1/2	406-4	E-4				2	#12	FOR PEC UNIT/LOUVERS 406-4L TO 9L	
RC-406-4D	1 1/2	406-4L TO 9L	E-4				7	#12	FOR LOUVER SELECTOR SW. 5S-406	
RC-406-5	1 1/4	406-5	E-4	5	#12	MCC-12			FOR LOUVERS 406-4L TO 406-9L	
P-406-5A	3/4	406-5	E-4	3	#12				FOR BLOWER RM. FAN 406-5	
P-406-5B	1/2	406-5	E-4	2	#12				FOR FAN MOTOR 406-5F	
C-406-5	1/2	406-5	E-4				3	#12	FOR DAMPER MOTOR 406-5D	
PC-406-1	1	406-1	E-4	5	#12	MCC-12			FOR PB-406-5	
P-406-1A	3/4	406-1	E-4	3	#12				FOR FAN MOTOR 406-1F	
P-406-1B	1/2	406-1	E-4	2	#12				FOR DAMPER MOTOR 406-1D	
C-406-1	1/2	406-1	E-4				2	#12	FOR LIMIT SW. LS-406-1	
P-422-2A	1	422-2	E-6 E-11	5	#12	MCC-12			FOR CHEMICAL BLDG. FAN 422-2	
P-422-2B	3/4	422-2	E-11	3	#12				FOR FAN MOTOR 422-2F	
P-422-2C	1/2	422-2	E-11	2	#12				FOR DAMPER MOTOR 422-2D	
RE-406-1A	1 1/4	411-1, 2 422-2	E-6				12	#12	START-STOP CONTROL FOR 411-1, 2 & 422-2	
RE-406-1B	1	406-1, 422-2	E-6				6	#12	START-STOP CONTROL FOR 406-1 & 422-2	
RE-406-1C	1 1/2	406-1, 411-1, 2, 422-2	E-6				18	#12	START-STOP CONT. FOR 406-1, 411-1, 2, 422-2	
RE-406-1D	1 1/2	11	E-6				18	#12	" " " " " " " "	
P-LS	2"	ROAD LTG.	E-1 E-2 E-4				2	#6	ROADWAY LTG. PROVIDE 1-1/2 GND WIRE AS SHOWN	
P-305-5C	3/4"	GAS PUMP	E-4				3	#12	SUPPLY TO GAS PUMP PROVIDE KEY SWITCH AS SHOWN	
P-406-1C	1 1/2	406-1, 422-2	E-4			MCC-12 PNL L-2A				

CONDUIT SCHEDULE SHEET FOR DRIVES ASSOCIATED WITH MOTOR CONTROL CENTER NO. 12

ROBSON & WOESE INC.
CONSULTING ENGINEERS
SYRACUSE NEW YORK

ONONDAGA COUNTY DEPARTMENT OF PUBLIC WORKS
DIVISION OF DRAINAGE AND SANITATION
BREWERTON WATER POLLUTION CONTROL PLANT
CONDUIT SCHEDULE
ELECTRICAL
TOWN OF CICERO ONONDAGA CO., N.Y.

BARTON, BROWN, CLYDE & LOGUIDICE
CONSULTING ENGINEERS & LAND SURVEYORS
NORTH SYRACUSE, NEW YORK

DATE: FEBRUARY 1975
SCALE: NONE
FILE NO.: 55.32-115F

REVISIONS

E-21

IN CHARGE OF: I.A.L.
DESIGNED BY: I.A.L.
DRAWN BY: G.S.
CHECKED BY: I.A.L.

CONDUIT DATA		REFERENCE DATA		POWER WIRING IN CONDUIT			CONTROL WIRING IN CONDUIT			REMARKS	
CONDUIT NO.	CONDUIT SIZE	ITEM NUMBERS ASSOCIATED WITH CONDUIT	REFERENCE DRAWINGS	QUANTITY OF CONDUCTORS	SIZE OF CONDUCTORS	CONDUIT OR WIRE SOURCE	QUANTITY OF CONDUCTORS	SIZE OF CONDUCTORS	CONDUIT OR WIRE SOURCE		NOTES
P-312-A	1 1/4	312-1, 2, 3	E-7	9	#10	MCC-13				SOUTH GALLERY HEATERS	
P-312-1A	3/4	312-1	E-7	3	#10					FOR DS-312-1	
P-312-1B	3/4	312-1	E-7	3	#12					FOR GALLERY HEATER 312-1	
C-312-1	1/2	312-1	E-7				2	#12		FOR ℄-312-1 THERMOSTAT	
P-312-B	1	312-2, 3	E-7	6	#10						
P-312-2A	3/4	312-2	E-7	3	#10					FOR DS-312-2	
P-312-2B	3/4	312-2	E-7	3	#12					FOR GALLERY HEATER 312-2	
C-312-2	1/2	312-2	E-7				2	#12		FOR ℄ 312-2 THERMOSTAT	
P-312-3A	3/4	312-3	E-7	3	#10					FOR DS-312-3	
P-312-3B	3/4	312-3	E-7	3	#12					FOR GALLERY HEATER 312-3	
C-312-3	1/2	312-3	E-7				2	#12		FOR ℄ 312-3 THERMOSTAT	
PC-411-A	1 1/4	411-1&2	E-7	10	#12	MCC-13	2	#12	MCC-13	FOR NORTH GALLERY FAN	
P-411-2A	3/4	411-2	E-7	3	#12					FOR FAN MOTOR 411-2F	
P-411-2B	1/2	411-2	E-7	2	#12					FOR DAMPER MOTOR 411-2D	
C-411-2	1/2	411-2	E-7				2	#12		FOR LIMIT SW. LS-411-2	
P-411-1A	1	411-1	E-7	5	#12					FOR FAN 411-1	
P-411-1B	3/4	411-1	E-7	3	#12					FOR FAN MOTOR 411-1F	
P-411-1C	1/2	411-1	E-7	2	#12					FOR DAMPER MOTOR 411-1D	
PC-412-A	1 1/4	412-1, 2	E-7	10	#12	MCC-13	2	#12	MCC-13	FOR SOUTH GALLERY FANS	
P-412-2A	3/4	412-2	E-7	3	#12					FOR FAN MOTOR 412-2F	
P-412-2B	1/2	412-2	E-7	2	#12					FOR DAMPER MOTOR 412-2D	
C-412-2	1/2	412-2	E-7				2	#12		FOR LIMIT SW. LS 412-2	
P-412-1A	1	412-1	E-7	5	#12					FOR FAN 412-1	
P-412-1B	3/4	412-1	E-7	3	#12					FOR FAN MOTOR 412-1F	
P-412-1C	1/2	412-1	E-7	2	#12					FOR DAMPER MOTOR 412-1D	
PC-104	1 1/2	104-1, 104-2	E-7	6	#12	MCC-12	10	#12	CONTROL RM.	POWER & CONTROL FOR SETT. TNK'S DRIVE UNITS	
PC-104-1	1 1/4	104-1	E-2 thru E-7	3	#12		5	#12			
P-104-1A	3/4	104-1	E-2	3	#12					FOR DS 104-1 (WEATHERPROOF)	
P-104-1B	3/4	104-1	E-2	3	#12					FOR SLUDGE COLLECTOR #1 DRIVE 104-1	
C-104-1A	1	104-1	E-2				5	#12			
C-104-1B	3/4	104-1	E-2				4	#12		FOR PB-104-1 (ONE WIRE RUNS TO XS 533-1B)	
C-104-1D	1/2	104-1	E-2				2	#12		FOR SHUTDOWN LIMIT SW. XS-533-1B	
PC-104-2	1 1/4	104-2	E-2 E-3 E-7	3	#12		5	#12			
P-104-2A	3/4	104-2	E-2	3	#12					FOR DS-104-2 (WEATHERPROOF)	
P-104-2B	3/4	104-2	E-2	3	#12					FOR SLUDGE COLLECTOR #2 DRIVE 104-2	
C-104-2A	1	104-2	E-2				5	#12			
C-104-2B	3/4	104-2	E-2				4	#12		FOR PB-104-2 (ONE WIRE RUNS TO XS-533-2B)	
C-104-2D	1/2	104-2	E-2				2	#12		FOR SHUTDOWN LIMIT SW. XS-533-2B	
P-107-A	1 1/4	107-1, 2	E-7	6	#10	MCC-12				FOR RETURN SLUDGE PUMPS 107-1,2 - N. GALLERY	
P-107-B	1 1/4	107-3, 4	E-7	6	#10	MCC-12				FOR RETURN SLUDG PUMPS 107-3,4 S. GALLERY	
PC-114-1	1 1/4	114-1	E-6	3	#12	MCC-12	6	#12	CONTROL ROOM	POWER & CONTROL FOR INST. AIR COMP.	
P-114-1A	3/4	114-1	E-6	3	#12					FOR DS-114-1	
P-114-1B	3/4	114-1	E-6	3	#12					FOR INST. AIR COMP. MOTOR 114-1	
C-114-1	1	114-1	E-6				6	#12		FOR CONTROL PANEL X-114-1	
PC-114-2	1 1/4	114-2	E-6	3	#12	MCC-12	6	#12	CONTROL ROOM	POWER & CONTROL FOR INST. AIR COMP.	
P-114-2A	3/4	114-2	E-6	3	#12					FOR DS-114-2	
P-114-2B	3/4	114-2	E-6	3	#12					FOR INST. AIR COMP. MOTOR 114-2	
C-114-2	1	114-2	E-6				6	#12		FOR CONTROL PANEL X-114-2	
P-115-1A	3/4	115-1	E-6	2	#10	MCC 12 PNL L2A				FOR INST. AIR DRYER	
P-115-1B	3/4	115-1	E-6	2	#10					FOR MOTOR 115-1	
PC-121-1	1 1/4	121-1	E-4	9	#12	MCC-12	5	#12	CONTROL ROOM	POWER & CONTROL FOR GARAGE O.H. DOOR	
P-121-1	1	121-1	E-4	3	#12		2	#12		FOR DOOR MOTOR, BRAKE, TEMP SW. 121-1	
C-121-1A	1 1/4	121-1	E-4				8	#12		FOR PB-121-1 (WIRE OPEN-CLOSE LIMIT SW TO PB-121-1)	
C-121-1B	1	121-1	E-4				5	#12			
C-121-1C	1/2	121-1	E-4				3	#12		FOR OPEN LS-121-1A (ONE WIRE RUNS TO CLOSE LS)	
C-121-1D	1/2	121-1	E-4				2	#12		FOR CLOSE LS-121-1B	
C-121-1E	1/2	121-1	E-4				2	#12		FOR INT. SW. 121-1	
PC-123-1	1 1/2	123-1, 123-2	E-6	6	#12	MCC-12	10	#12	CONTROL ROOM	POWER & CONTROL FOR PLANT AIR COMP.	
P-123-1	3/4	123-1	E-6	3	#12					FOR AIR COMP'R MOTOR 123-1	
P-123-2	3/4	123-2	E-6	3	#12					FOR AIR COMP'R MOTOR 123-2	
C-123-1A	1/2	123-1	E-6				2	#12		FOR PB-123-1 (LOCKOUT)	
C-123-1B	1/2	123-2	E-6				2	#12		FOR PB-123-2 (LOCKOUT)	
C-123-1C	1	123-1, 123-2	E-6				6	#12		FOR PANEL X-123	
C-123-1D	1/2	123-1	E-6				2	#12		FOR PRESSURE SW. PS-A (123-1)	
C-123-1E	1/2	123-2	E-6				2	#12		FOR PRESSURE SW. PS-B (123-2)	
P-124-1A	3/4	124-1	E-6	2	#10	MCC-12 PNL L2A				PLANT AIR DRYER	
P-124-1B	3/4	124-1	E-6	2	#10					FOR MOTOR 124-1	
PC-702-1	3/4	702-1, LS-753-1	E-4	3	#12	MCC-12	2	#12	MCC-12	POWER & CONTROL FOR GENERATOR FUEL SYSTEM	
P-702-1	3/4	702-1	E-4	3	#12					FOR FUEL TRANSFER PUMP 702-1	
C-702-1	3/4	LS-753-1	E-4				2	#12		FOR FLOAT SWITCH LS-753-1	

CONDUIT SCHEDULES SHEET FOR DRIVES ASSOCIATED WITH MOTOR CONTROL CENTERS 12 & 13

IN CHARGE BY: FAL
DESIGNED BY: NK
DRAWN BY: BCR
CHECKED BY: NK

ROBSON & WOESE INC.
CONSULTING ENGINEERS
SYRACUSE NEW YORK

ONONDAGA COUNTY DEPARTMENT OF PUBLIC WORKS
DIVISION OF DRAINAGE AND SANITATION
BREWERTON WATER POLLUTION CONTROL PLANT

CONDUIT SCHEDULE
ELECTRICAL

TOWN OF CICERO — ONONDAGA CO., N.Y.

BARTON, BROWN, CLYDE & LOGUIDICE
CONSULTING ENGINEERS & LAND SURVEYORS
NORTH SYRACUSE, NEW YORK

DATE: FEBRUARY 1975
SCALE: NONE
FILE NO.: 55-32-116F

E22

REVISIONS

CONDUIT DATA		REFERENCE DATA		POWER WIRING IN CONDUIT			CONTROL WIRING IN CONDUIT			REMARKS	
CONDUIT NO.	CONDUIT SIZE	ITEM NO'S ASSOCIATED WITH CONDUIT	REFERENCE DRAWINGS	QUANTITY OF CONDUCTORS	SIZE OF CONDUCTORS	CONDUIT OR WIRE SOURCE	QUANTITY OF CONDUCTORS	SIZE OF CONDUCTORS	CONDUIT OR WIRE SOURCE		NOTES
PC-108-1	1¼	108-1 FCV-522-1	E-7	3	#12	MCC-13	7	#12	CONTROL ROOM	NORTH GALLERY DIG. SLUDGE PUMP #1	
P-108-1	¾	108-1	E-7	3	#12					FOR MOTOR - 108-1	
C-108-1A	½	108-1	E-7				3	#12		FOR PB-108-1	
C-108-1B	¾	108-1 FCV-522-1	E-7				4	#12		FOR LS-522-1 & FCV-522-1	
PC-108-2	1¼	108-2 FCV-522-2	E-7	3	#12	MCC-13	7	#12	CONTROL ROOM	NORTH GALLERY DIG. SLUDGE PUMP #2	
P-108-2	¾	108-2	E-7	3	#12					FOR MOTOR 108-2	
C-108-2A	½	108-2	E-7				3	#12		FOR PB-108-2	
C-108-2B	¾	108-2 FCV-522-2	E-7				4	#12		FOR LS-522-2 & FCV-522-2	
PC-108-3	1¼	108-3 FCV-522-3	E-7	3	#12	MCC-13	7	#12	CONTROL ROOM	SOUTH GALLERY DIG. SLUDGE PUMP #3	
P-108-3	¾	108-3	E-7	3	#12					FOR MOTOR 108-3	
C-108-3A	½	108-3	E-7				3	#12		FOR PB-108-3	
C-108-3B	¾	108-3 FCV-522-3	E-7				4	#12		FOR LS-522-3 & FCV-522-3	
PC-108-4	1¼	108-4 FCV-522-4	E-7	3	#12	MCC-13	7	#12	CONTROL ROOM	SOUTH GALLERY DIG. SLUDGE PUMP #4	
P-108-4	¾	108-4	E-7	3	#12					FOR MOTOR 108-4	
C-108-4A	½	108-4	E-7				3	#12		FOR PB-108-4	
C-108-4B	¾	108-4 FCV-522-4	E-7				4	#12		FOR LS-522-4 & FCV-522-4	
PC-109-1A	1½	109-1 109-2	E-1 E-2 E-7	6	#12	MCC-13	8	#12	CONTROL ROOM	SERVICE FOR SCUM PUMPS 109-1, 109-2 IN ONE CONDUIT - FROM MCC-13 & CONT. RM.	
PC-109-1B	1	109-1	E-1 E-2 E-7	3	#12		4	#12		SCUM PIT #1 PUMP #109-1 & CONTROLS	
P-109-1A	¾	109-1	E-2	3	#12					FOR DS-109-1	
P-109-1B	¾	109-1	E-2	3	#12					FOR MOTOR 109-1	
C-109-1	¾	109-1	E-2				4	#12		FOR PB 109-1 (START, L.O. STOP, REVERSE)	
PC-109-2A	1	109-2	E-1 E-2 E-7	3	#12		4	#12		SCUM PIT #2 PUMP 109-2 & CONTROLS	
P-109-2A	¾	109-2	E-2	3	#12					FOR DS-109-2	
P-109-2B	¾	109-2	E-2	3	#12					FOR MOTOR 109-2	
C-109-2	¾	109-2	E-2				4	#12		FOR PB 109-2	
P-306	1	306-2,3	E-4	6	#12	MCC-13				BLOWER ROOM HEATERS	
P-306-2A	¾	306-2	E-4	3	#12					FOR DS-306-2	
P-306-2B	¾	306-2	E-4	3	#12					FOR BLOWER RM. HEATER 306-2	
C-306-2	½	306-2	E-4				2	#12		FOR ¢ 306-2 THERMOSTAT	
P-306-3A	¾	306-3	E-4	3	#12					FOR DS-306-3	
P-306-3B	¾	306-3	E-4	3	#12					FOR BLOWER ROOM HEATER 306-3	
C-306-3	½	306-3	E-4				2	#12		FOR ¢ 306-3 THERMOSTAT	
P-307-1A	¾	307-1	E-6	3	#12	MCC-13				FOR DS-307-1	
P-307-1B	¾	307-1	E-6	3	#12					FOR CONT. RM. BASEMENT HEATER 307-1	
C-307-1	½	307-1	E-6				2	#12		FOR ¢ 307-1 THERMOSTAT	
P-311-A	1¼	311-1,2,3	E-7	9	#10	MCC-13				NORTH GALLERY HEATERS	
P-311-1A	¾	311-1	E-7	3	#10					FOR DS-311-1	
P-311-1B	¾	311-1	E-7	3	#12					FOR GALLERY HEATER 311-1	
C-311-1	½	311-1	E-7				2	#12		FOR ¢ 311-1 THERMOSTAT	
P-311-B	1¼	311- 2,3	E-7	6	#10						
P-311-2A	¾	311-2	E-7	3	#10					FOR DS-311-2	
P-311-2B	¾	311-2	E-7	3	#12					FOR GALLERY HEATER 311-2	
C-311-2	½	311-2	E-7				2	#12		FOR ¢ 311-2 THERMOSTAT	
P-311-3A	¾	311-3	E-7	3	#10					FOR DS-311-3	
P-311-3B	¾	311-3	E-7	3	#12					FOR GALLERY HEATER 311-3	
C-311-3	½	311-3	E-7				2	#12		FOR ¢-311-3 THERMOSTAT	
P-208-1A	¾	208-1	E-6	3	#12	MCC-13 PNL L-1				FOR HOT WATER HEATER DS-208-1	
P-208-1B	¾	208-1	E-6	3	#12					HOT WATER HEATER 208-1	
P-212-1B	¾	212-1	E-6	3	#12	MCC-13 PN L-1				HOT WATER HEATER DS-212-1	
P-212-1C	¾	212-1	E-6	3	#12					HOT WATER HEATER 212-1	
P-301-2	¾	301-2	E-4	3	#12	MCC-13				CONTROL RM. HEATER 301-2	
C-301-2	½	301-2	E-4				2	#12		FOR ¢ 301-2 THERMOSTAT	
P-301-3	¾	301-3	E-4	3	#12	MCC-13				CONTROL RM. HEATER 301-3	
C-301-3	½	301-3	E-4				2	#12		FOR ¢ 301-3 THERMOSTAT	
P-304	1	303-1,304-1	E-4	6	#12	MCC-13					
P-303-1	¾	303-1	E-4	3	#12					FOR TOILET RM. HEATER 303-1	
C-301-1	½	303-1	E-4				2	#12		FOR ¢ 303-1 THERMOSTAT	
P-304-1	¾	304-1	E-4	3	#12					FOR JANITOR RM. HEATER 304-1	
C-304-1	½	304-1	E-4				2	#12		FOR ¢ 304-1 THERMOSTAT	
P-305-A	1½	305-1,2,3,&4	E-4	12	#10	MCC-13				FOR GARAGE HEATERS	
P-305-1A	¾	305-1	E-4	3	#10					FOR DS-305-1	
P-305-1B	¾	305-1	E-4	3	#12					FOR GARAGE HEATER 305-1	
C-305-1	½	305-1	E-4				2	#12		FOR ¢ 305-1 THERMOSTAT	
P-305-B	1¼	305-2,3&4	E-4	9	#10						
P-305-2A	¾	305-2	E-4	3	#10					FOR DS-305-2	
P-305-2B	¾	305-2	E-4	3	#12					FOR GARAGE HEATER 305-2	
C-305-2	½	305-2	E-4				2	#12		FOR ¢ 305-2 THERMOSTAT	
P-305-C	1¼	305-3, 4	E-4	6	#10						
P-305-3A	¾	305-3	E-4	3	#10					FOR DS-305-3	
P-305-3B	¾	305-3	E-4	3	#12					FOR GARAGE HEATER 305-3	
C-305-3	½	305-3	E-4				2	#12		FOR ¢-305-3 THERMOSTAT	
P-305-4A	¾	305-4	E-4	3	#10					FOR DS-305-4	
P-305-4B	¾	305-4	E-4	3	#12					FOR GARAGE HEATER 305-4	
C-305-4	½	305-4	E-4				2	#12		FOR ¢ 305-4 THERMOSTAT	

CONDUIT SCHEDULE SHEET NO 1
FOR DRIVES ASSOCIATED WITH
MOTOR CONTROL CENTER 13

IN CHARGE OF: P.R.L.
DESIGNED BY: P.R.L.
DRAWN BY: E.C.F.
CHECKED BY: M.K.

ROBSON & WOESE INC.
CONSULTING ENGINEERS
SYRACUSE NEW YORK

REVISIONS

ONONDAGA COUNTY DEPARTMENT OF PUBLIC WORKS
DIVISION OF DRAINAGE AND SANITATION
BREWERTON WATER POLLUTION CONTROL PLANT

CONDUIT SCHEDULE
ELECTRICAL

TOWN OF CICERO ONONDAGA CO., N.Y.

BARTON, BROWN, CLYDE & LOGUIDICE
CONSULTING ENGINEERS & LAND SURVEYORS
NORTH SYRACUSE, NEW YORK

DATE: FEBRUARY 1975
SCALE: NONE
FILE NO.: 55.32-117F

E-23

IN CHARGE OF: F.A.L.
DESIGNED BY: E.K.P.
DRAWN BY:
CHECKED BY: F.A.L.

CONDUIT SCHEDULE SHEET FOR DRIVES ASSOCIATED WITH MOTOR CONTROL CENTER 11 & 15 PANELS D-1 & D-2

CONDUIT DATA		REFERENCE DATA		POWER WIRING IN CONDUIT			CONTROL WIRING IN CONDUIT			REMARKS	
CONDUIT NO.	CONDUIT SIZE	ITEM NOS ASSOCIATED WITH CONDUIT	REFERENCE DRAWING	QUANTITY OF CONDUCTORS	SIZE OF CONDUCTORS	CONDUIT OR WIRE SOURCE	QUANTITY OF CONDUCTORS	SIZE OF CONDUCTORS	CONDUIT OR WIRE SOURCE		NOTES
PC-129-1	1¼	129-1	E-11	3	#12	MCC-15	8	#12	MCC-15	CHEMICAL BUILDING OVERHEAD DOOR	
P-129-1	1	129-1	E-11	3	#12		2	#12		FOR MOTOR 129-1 & TEMP. SWITCH	
C-129-1A	1	129-1	E-11				8	#12		FOR PB-129-1	
C-129-1B	¾	129-1	E-11				5	#12		FOR INT. SW., OPEN & CLOSE LIMIT SWITCHS	
C-129-1C	½	OPEN L.S.	E-11				2	#12		FOR LIMIT SW. - OPEN	
C-129-1D	½	CLOSE L.S.	E-11				2	#12		FOR LIMIT SW. - CLOSE	
C-129-1F	½	INT. SWITCH	E-11				2	#12		FOR INT. SWITCH	
PC-129-2	1¼	129-2	E-11	3	#12	MCC-15	8	#12	MCC-15	CHEMICAL BUILDING OVERHEAD DOOR	
P-129-2	1	129-2	E-11	3	#12		2	#12		FOR MOTOR 129-2 & TEMP. SWITCH	
C-129-2A	1	129-2	E-11				8	#12		FOR PB-129-2	
C-129-2B	¾	129-2	E-11				5	#12		FOR INT. SW. OPEN & CLOSE LIMIT SWITCHES	
C-129-2C	½	OPEN L.S.	E-11				2	#12		FOR LIMIT SW. - OPEN	
C-129-2D	½	CLOSE L.S.	E-11				2	#12		FOR LIMIT SW. - CLOSE	
C-129-2F	½	INT. SWITCH	E-11				2	#12		FOR INT. SWITCH	
P-127-1A	1½	ALUM PANEL	E-11	3	#10	MCC-15				CHEMICAL BUILD - FEED TO ALUM. PANEL	
P-127-2A	¾	127-1	E-6	3	#12	ALUM PANEL				FOR ALUM PUMP 127-1	
P-127-2B	¾	127-2	E-6	2	#12	ALUM PANEL				FOR ALUM PUMP 127-2	
P-128-1	1½	POLYMER PN	E-11	3	#8	MCC-15				CHEM. BLDG. FEED TO POLYMER CONT PANEL	
P-128-1A	¾	128-1	E-11	3	#12	POLY PANEL				FEED TO VIBRATOR PUMP 128-1	
P-128-1B	¾	128-2	E-11	3	#12	POLY PANEL				FEED TO MIXER PUMP 128-2	
P-128-1C	¾	128-3	E-11	3	#12	POLY PANEL				FEED TO TRANSFER PUMP 128-3	
PC-128-1	1½	128-4 5	E-6	6	#12	POLY PANEL	8	#12		POWER FEEDS 128-4 128-5 & CONTROLS	
P-128-4A 5A	¾	128-4 5	E-6	3	#12					TO DISCONECT SWITCHES FOR 128-4 & 128-5	
P-128-4B 5B	¾	128-4 5	E-6	3	#12	DISC SWITCH				TO FEED PUMPS 128-4 & 128-5	
C-128-4	¾	128-4	E-6			POLY PANEL	4	#12		TO PB - 128-4	
C-128-5	¾	128-5	E-6			POLY PANEL	4	#12		TO PB 128-5	
P-321-1	¾	321-1	E-11	3	#12	MCC-15				FOR HEATER 321-1	
C-321-1	½	321-1	E-11				2	#12		FOR ℄ 321-1 THERMOSTAT	
P-321-2	¾	321-2	E-11	3	#12	MCC-15				FOR HEATER 321-2	
C-321-2	½	321-2	E-11				2	#12		FOR ℄ 321-2 THERMOSTAT	
P-321-3	¾	321-3	E-11	3	#12	MCC-15				FOR HEATER 321-3	
C-321-3	½	321-3	E-11				2	#12		FOR ℄ 321-3 THERMOSTAT	
P-321-4	¾	321-4	E-11	3	#12	MCC-15				FOR HEATER 321-4	
C-321-4	½	321-4	E-11				2	#12		FOR ℄ 321-4 THERMOSTAT	
P-322-1A	¾	322-1	E-11	3	#12	MCC-15				FOR DS-322-1	
P-322-1B	¾	322-1	E-11	3	#12					FOR HEATER 322-1	
C-322-1	½	322-1	E-11				2	#12		FOR ℄ 322-1 THERMOSTAT	
P-322-2A	¾	322-2	E-11	3	#12	MCC-15				FOR DS-322-2	
P-322-2B	¾	322-2	E-11	3	#12					FOR HEATER 322-2	
C-322-2	½	322-2	E-11				2	#12		FOR ℄ 322-2 THERMOSTAT	
P-322-3A	¾	322-3	E-11	3	#12	MCC-15				FOR DS-322-3	
P-322-3B	¾	322-3	E-11	3	#12					FOR HEATER 322-3	
C-322-3	½	322-3	E-11				2	#12		FOR ℄ 322-3 THERMOSTAT	
P-322-4A	¾	322-4	E-11	3	#12	MCC-15				FOR DS-322-4	
P-322-4B	¾	322-4	E-11	3	#12					FOR HEATER 322-4	
C-322-4	½	322-4	E-11				2	#12		FOR ℄ 322-4 THERMOSTAT	
PC-422-1	1¼	422-1	E-11	3	#12	MCC-15	4	#12	MCC-15	FOR CHEMICAL BLDG. FAN & LOUVERS	
P-422-1B	¾	422-1F	E-11	3	#12					FOR FAN MOTOR 422-1F	
P-422-1C	½	422-1D	E-11	2	#12					FOR DAMPER MOTOR 422-1D	
C-421-1A	½	FCC UNIT	E-11				3	#12		FOR LOUVER CONTROL STATION - FCC	
C-421-1B	½	421-1L	E-11				3	#12		FOR LOUVER 421-1L	
C-421-1C	½	421-2L	E-11				3	#12		FOR LOUVER 421-2L	
P-211-1	½	211-1	E-11	2	#12	MCC-15 PNL L5				FOR HOT WATER HEATER 211-1	
P-422-1A	1	422-1F,1D	E-11	5	#12					FOR CHEMICAL BLDG. FAN	
C-110-A	1½	PANEL G	E-4	2	#12	MCC-11 PNL L-3	14	#12	MCC-11	AIR PURIFICATION SYSTEM & BLOWER INTERLOCKS	
C-110-B	2	PANEL B	E-4				28	#12	MCC-11	AERATION BLOWERS - RECYCLE CONTROL	
C-110-C	3	PANEL F	E-4				44	#12	MCC-11	AERATION BLOWERS - SURGE PROTECTION	
P-110-1	2½	110-1	E-4	3	#4/0	MCC-11				FOR BLOWER MOTOR 110-1	
C-110-1A	¾	110-1	E-4				4	#12	MCC 11	FOR PB-110-1	
C-110-1B	¾	110-1	E-4				4	#12	MCC-11	FOR BLOWER 110-1 THERMOGUARD PANEL	
P-110-2	2½	110-2	E-4	3	#4/0	MCC-11				FOR BLOWER MOTOR 110-2	
C-110-2A	¾	110-2	E-4				4	#12	MCC-11	FOR PB-110-2	
C-110-2B	¾	110-2	E-4				4	#12	MCC-11	FOR BLOWER 110-2 THERMOGUARD SYSTEM	
P-110-3	2½	110-3	E-4	3	#4/0	MCC-11				FOR BLOWER MOTOR 110-3	
C-110-3A	¾	110-3	E-4				4	#12	MCC-11	FOR PB-110-3	
C-110-3B	¾	110-3	E-4				4	#12	MCC-11	FOR BLOWER 110-3 THERMOGUARD SYSTEM	
P-110-4	2½	110-4	E-4	3	#4/0	MCC-11				FOR BLOWER MOTOR 110-4	
C-110-4A	¾	110-4	E-4				4	#12	MCC-11	FOR PB-110-4	
C-110-4B	¾	110-4	E-4				4	#12	MCC-11	FOR BLOWER 110-4 THERMOGUARD SYSTEM	
P-107-1A	1	SC-516-1	E-7	3	#10	PANEL D-1				FOR RETURN SLUDGE PUMP 107-1	
P-107-2A	1	SC-516-2	E-7	3	#10	PANEL D-1				FOR RETURN SLUDGE PUMP 107-2	
P-107-3A	1	SC-516-3	E-7	3	#10	PANEL D-2				FOR RETURN SLUDGE PUMP 107-3	
P-107-4A	1	SC-516-4	E-7	3	#10	PANEL D-2				FOR RETURN SLUDGE PUMP 107-4	
P-107-1B	1	107-1	E-7	3	#10	PANEL D-1				FOR RETURN SLUDGE PUMP 107-1	
P-107-1C	1	107-1	E-7	3	#8	PANEL D-1				FOR RETURN SLUDGE PUMP 107-1	
C-107-1A	¾	107-1	E-7				4	#12	PANEL D-1	FOR FCV-514-1 & FCV-538-1	
C-107-1B	½	107-1	E-7				2	#12	PANEL D-1	FOR FCV-514-1	
C-107-1C	½	107-1	E-7				2	#12	PANEL D-1	FOR FCV-538-1	
P-107-2B	1	107-2	E-7	3	#10	PANEL D-1				FOR RETURN SLUDGE PUMP 107-2	
P-107-2C	1	107-2	E-7	3	#8	PANEL D-1				FOR RETURN SLUDGE PUMP 107-2	
C-107-2A	¾	107-2	E-7				4	#12	PANEL D-1	FOR FCV-514-2 & FCV-538-2	
C-107-2B	½	107-2	E-7				2	#12	PANEL D-1	FOR FCV-514-2	
C-107-2C	½	107-2	E-7				2	#12	PANEL D-1	FOR FCV-538-2	
P-107-3B	1	107-3	E-7	3	#10	PANEL D-2				FOR RETURN SLUDGE PUMP 107-3	
P-107-3C	1	107-3	E-7	3	#8	PANEL D-2				FOR RETURN SLUDGE PUMP 107-3	
C-107-3A	¾	107-3	E-7				4	#12	PANEL D-2	FOR FCV-514-3 & FCV-538-3	
C-107-3B	½	107-3	E-7				2	#12	PANEL D-2	FOR FCV-514-3	
C-107-3C	½	107-3	E-7				2	#12	PANEL D-2	FOR FCV-538-3	
P-107-4B	1	107-4	E-7	3	#10	PANEL D-2				FOR RETURN SLUDGE PUMP 107-4	
P-107-4C	1	107-4	E-7	3	#8	PANEL D-2				FOR RETURN SLUDGE PUMP 107-4	
C-107-4A	¾	107-4	E-7				4	#12	PANEL D-2	FOR FCV-514-4 & FCV-538-4	
C-107-4B	½	107-4	E-7				2	#12	PANEL D-2	FOR FCV-514-4	
C-107-4C	½	107-4	E-7				2	#12	PANEL D-2	FOR FCV-538-4	

ROBSON & WOESE INC.
CONSULTING ENGINEERS
SYRACUSE NEW YORK

REVISIONS	

ONONDAGA COUNTY DEPARTMENT OF PUBLIC WORKS
DIVISION OF DRAINAGE AND SANITATION
BREWERTON WATER POLLUTION CONTROL PLANT

CONDUIT SCHEDULE
ELECTRICAL

TOWN OF CICERO ONONDAGA CO., N.Y.

BARTON, BROWN, CLYDE & LOGUIDICE
CONSULTING ENGINEERS & LAND SURVEYORS
SYRACUSE, NEW YORK

DATE: FEBRUARY 1975
SCALE: NONE
FILE NO.: 55.32-18F

E-24

CONDUIT DATA		REFERENCE DATA		POWER WIRING IN CONDUIT			CONTROL WIRING IN CONDUIT			REMARKS	
CONDUIT NUMBER	CONDUIT SIZE	ITEM NUMBERS ASSOCIATED WITH CONDUIT	REFERENCE DRAWINGS	QUANTITY OF CONDUCTORS	SIZE OF CONDUCTORS	CONDUIT OR WIRE SOURCE	QUANTITY OF CONDUCTORS	SIZE OF CONDUCTORS	CONDUIT OR WIRE SOURCE		NOTES
P-313-1	3/4"	313-1	E9	3	#12	MCC-23				FOR CONTROL ROOM HEATER 318-1	
C-313-1	1/2"	313-1	E9				2	#12		FOR ¢ 313-1 THERMOSTAT	
P-313-3	3/4"	313-3	E9	3	#12	MCC-23				FOR CONTROL ROOM HEATER 313-3	
C-313-3	1/2"	313-3	E9				2	#12		FOR ¢ 313-3 THERMOSTAT	
P-314-2A	3/4"	314-2	E9	3	#12	MCC-23				FOR DS-314-2	
P-314-2B	3/4"	314-2	E9	3	#12					FOR MOTOR ROOM HEATER 314-2	
C-314-2	1/2"	314-2	E9				2	#12		FOR ¢ 314-2 THERMOSTAT	
P-315-2A	3/4"	315-2	E9	3	#12	MCC-23				FOR DS-315-2	
P-315-2B	3/4"	315-2	E9	3	#12					FOR PUMP ROOM HEATER 315-2	
C-315-2	1/2"	315-2	E9				2	#12		FOR ¢ 315-2 THERMOSTAT	
P-316-1A	3/4"	316-1	E9	3	#12	MCC-23				FOR DS-316-1	
P-316-1B	3/4"	316-1	E9	3	#12					FOR STORAGE ROOM HEATER 316-1	
C-316-1	1/2"	316-1	E9				2	#12		FOR ¢ 316-1 THERMOSTAT	
PC-317-2	1	317-2	E9	3	#12	MCC-23	2	#12	MCC-23	FOR GRIT ROOM HEATER	
P-317-2	3/4"	317-2	E9	3	#12					FOR HEATER 317-2	
C-317-2	1/2"	317-2	E9				2	#12		FOR ¢ 317-2 THERMOSTAT	
PC-317-4	1	317-2	E9	3	#12	MCC-23	2	#12	MCC-23	FOR GRIT ROOM HEATER	
P-317-4	3/4"	317-4	E9	3	#12					FOR HEATER 317-4	
C-317-4	1/2"	317-4	E9				2	#12		FOR ¢ 317-4 THERMOSTAT	
PC-317-5	1	317-5	E9	3	#12	MCC-23	2	#12	MCC-23	FOR GRIT ROOM HEATER	
P-317-5	3/4"	317-5	E9	3	#12					FOR HEATER 317-5	
C-317-5	1/2"	317-5	E9				2	#12		FOR ¢ 317-5 THERMOSTAT	
PC-317-6	1	317-6	E9	3	#12	MCC-23	2	#12	MCC-23	FOR GRIT ROOM HEATER	
P-317-6	3/4"	317-6	E9	3	#12					FOR HEATER 317-6	
C-317-6	1/2"	317-6	E9				2	#12		FOR ¢ 317-6	
PC-318-1	1	318-1	E9	3	#12	MCC-23	2	#12	MCC-23	FOR COMMINUTOR ROOM HEATER	
P-318-1	3/4"	318-1	E9	3	#12					FOR HEATER 318-1	
C-318-1	1/2"	318-1	E9				2	#12		FOR ¢ 318-1 THERMOSTAT	
PC-318-2	1	318-2	E9	3	#12	MCC-23	2	#12	MCC-23	FOR COMMINUTOR ROOM HEATER	
P-318-2	3/4"	318-2	E9	3	#12					FOR HEATER 318-2	
C-318-2	1/2"	318-2	E9				2	#12		FOR ¢ 318-2 THERMOSTAT	
PC-318-3	1	318-3	E9	3	#12	MCC-23	2	#12	MCC-23	FOR COMMINUTOR ROOM HEATER	
P-318-3	3/4"	318-3	E9	3	#12					FOR HEATER 318-3	
C-318-3	1/2"	318-3	E9				2	#12		FOR ¢ 318-3 THERMOSTAT	
PC-318-4	1	318-4	E9	3	#12	MCC-23	2	#12	MCC-23	FOR COMMINUTOR ROOM HEATER	
P-318-4	3/4"	318-4	E9	3	#12					FOR HEATER 318-4	
C-318-4	1/2"	318-4	E9				2	#12		FOR ¢ 318-4 THERMOSTAT	
PC-318-5	1	318-5	E9	3	#12	MCC-23	2	#12	MCC-23	FOR COMMINUTOR ROOM HEATER	
P-318-5	3/4"	318-5	E9	3	#12					FOR HEATER 318-5	
C-318-5	1/2"	318-5	E9				2	#12		FOR ¢ 318-5 THERMOSTAT	
PC-318-6	1	318-6	E9	3	#12	MCC-23	2	#12	MCC-23	FOR COMMINUTOR ROOM HEATER	
P-318-6	3/4"	318-6	E9	3	#12					FOR HEATER 318-6	
C-318-6	1/2"	318-6	E9				2	#12		FOR ¢ 318-6 THERMOSTAT	
PC-318-7	1	318-7	E9	3	#12	MCC-23	2	#12	MCC-23	FOR COMMINUTOR ROOM HEATER	
P-318-7	3/4"	318-7	E9	3	#12					FOR HEATER 318-7	
C-318-7	1/2"	318-7	E9				2	#12		FOR ¢ 318-7 THERMOSTAT	
P-319-1A	3/4"	319-1	E9	3	#12	MCC-23				FOR DS-319-1	
P-319-1B	3/4"	319-1	E9	3	#12					FOR CHLORINATION ROOM HEATER 319-1	
C-319-1	1/2"	319-1	E9				2	#12		FOR ¢ 319-1 THERMOSTAT	
P-320-A	1 1/4	320-1, 320-3	E9	6	#10	MCC-23				FOR CHLORINE STORAGE ROOM HEATERS	
P-320-1A	3/4"	320-1	E9	3	#10					FOR DS-320-1	
P-320-1B	3/4"	320-1	E9	3	#10					FOR HEATER 320-1	
C-320-1	1/2"	320-1	E9				2	#12		FOR ¢ 320-1 THERMOSTAT	
P-320-3A	3/4"	320-3	E9	3	#10					FOR DS-320-3	
P-320-3B	3/4"	320-3	E9	3	#10					FOR HEATER 320-3	
C-320-3	1/2"	320-3	E9				2	#12		FOR ¢ 320-3 THERMOSTAT	
PC-101-1	1"	101-1	E9	3	#12	MCC-21	4	#12	MCC-21	FOR COMMINUTOR No. 1	
P-101-1A	3/4"	101-1	E9	3	#12					FOR DS-101-1	
P-101-1B	3/4"	101-1	E9	3	#12					FOR MOTOR 101-1	
C-101-1	3/4"	101-1	E9				4	#12		FOR PB-101-1	
PC-101-2	1"	101-2	E9	3	#12	MCC-21	4	#12	MCC-21	FOR COMMINUTOR No. 2	
P-101-2A	3/4"	101-2	E9	3	#12					FOR DS-101-2	
P-101-2B	3/4"	101-2	E9	3	#12					FOR MOTOR 101-2	
C-101-2	3/4"	101-2	E9				4	#12		FOR PB-101-2	
P-102-1	3/4"	102-1	E9	3	#12	MCC-21				FOR HOIST SYSTEM GRIT REMOVAL RM.	
PC-105-1	1"	105-1	E9	3	#12	MCC-21	4	#12	MCC-21	FOR EFFLUENT SAMPLE PUMP - MOTOR ROOM	
P-105-1	3/4"	105-1	E9	3	#12					FOR MOTOR 105-1	
C-105-1	3/4"	105-1	E9				4	#12		FOR PB-105-1	
P-122-1A	3/4"	122-1	E9	3	#12	MCC-21				FOR DS-122-1 CHLORINE STORAGE ROOM HOIST	
P-122-1B	3/4"	122-1	E9	3	#12					FOR HOIST RUNWAY CONDUCTORS	
PC-125-1	1 1/4"	125-1	E9	3	#12	MCC-21	6	#12	MCC-21	FOR MECHANICAL BAR SCREEN	
P-125-1A	3/4"	125-1	E9	3	#12					FOR DS-125-1	
P-125-1B	3/4"	125-1	E9	3	#12					FOR MOTOR 125-1	
C-125-1	1"	125-1	E9				6	#12		FOR PB-125-1	
PC-203-1	1"	203-1	E9	3	#12	MCC-21	4	#12	MCC-21	EFFLUENT WATER SUPPLY PUMP No. 1	
P-203-1	3/4"	203-1	E9	3	#12					FOR MOTOR 203-1	
C-203-1	3/4"	203-1	E9				4	#12		FOR PB-203-1	
PC-203-2	1"	203-2	E9	3	#10	MCC-21	4	#12	MCC-21	EFFLUENT WATER SUPPLY PUMP No. 2	
P-203-2	3/4"	203-2	E9	3	#10					FOR MOTOR 203-2	
C-203-2	3/4"	203-2	E9				4	#12		FOR PB-203-2	
PC-203-3	1"	203-3	E9	3	#10	MCC-21	4	#12	MCC-21	EFFLUENT WATER SUPPLY PUMP No. 3	
P-203-3	3/4"	203-3	E9	3	#10					FOR MOTOR 203-3	
C-203-3	3/4"	203-3	E9				4	#12		FOR PB-203-3	
PC-612-1	1 1/4	PC-612-1	E9	2	#12	MCC-21 PNL-L4	6	#12	MCC-21	FOR PANEL PC-612-1 POWER & CONTROL	
C-612-1A	1"	PC-612-1	E9				7	#12		FOR 1406CR, 1410CR, PS-612-1 & SV-618-1	
C-612-1B	1/2"	PC-612-1	E9				2	#12		FOR PRESSURE SWITCH PS-612-1	
C-612-1C	1"	PC-612-1	E9				6	#12		FOR RELAY 1410CR & SV-618-1	
C-612-1D	1/2"	PC-612-1	E9				2	#12		FOR SOLENOID VALVE SV-618-1 (LOCATE IN FIELD)	
P-313-2	3/4"	313-2	E9	3	#12	MCC-21				FOR HEATER 313-2, CONTROL ROOM	
C-313-2	1/2"	313-2	E9				2	#12		FOR ¢ 313-2 THERMOSTAT	
P-314-1A	3/4"	314-1	E9	3	#12	MCC-21				FOR DS-314-1 MOTOR ROOM HEATER	
P-314-1B	3/4"	314-1	E9	3	#12					FOR HEATER 314-1	
C-314-1	1/2"	314-1	E9				2	#12		FOR ¢ 314-1 THERMOSTAT	

CONDUIT SCHEDULE SHEET
FOR
DRIVES ASSOCIATED
WITH
MOTOR CONTROL CENTERS #1 & #2

IN CHARGE OF: F.R.L.
DESIGNED BY: J.J.S.
DRAWN BY:
CHECKED BY: N.K.

ROBSON & WOESE INC.
CONSULTING ENGINEERS
SYRACUSE NEW YORK

REVISIONS

ONONDAGA COUNTY DEPARTMENT OF PUBLIC WORKS
DIVISION OF DRAINAGE AND SANITATION
BREWERTON WATER POLLUTION CONTROL PLANT

CONDUIT SCHEDULE
ELECTRICAL

TOWN OF CICERO — ONONDAGA CO., N.Y.

BARTON, BROWN, CLYDE & LOGUIDICE
CONSULTING ENGINEERS AND LAND SURVEYORS
NORTH SYRACUSE, NEW YORK

DATE: FEBRUARY 1975
SCALE: NONE
FILE NO.: 55 32-119F

E-25

CONDUIT DATA		REFERENCE DATA	POWER WIRING IN CONDUIT			CONTROL WIRING IN CONDUIT			REMARKS	NOTES
CONDUIT NUMBER	CONDUIT SIZE	ITEM NUMBERS ASSOCIATED WITH CONDUIT	REFERENCE DRAWINGS	QUANTITY OF CONDUCTORS	SIZE OF CONDUCTORS	CONDUIT OR WIRE SOURCE	QUANTITY OF CONDUCTORS	SIZE OF CONDUCTORS		
P-315-1A	3/4"	E9	315-1	E9	3 #12	MCC-21				
P-315-1B	3/4"	E9	315-1	E9	3 #12				FOR DS-315-1, PUMP ROOM HEATER	
C-315-1	1/2"	E9	315-1	E9			2	#12	FOR HEATER 315-1	
PC-317-1	3/4"	E9	317-1	E9	3 #12	MCC-21	2	#12	FOR $ 315-1 THERMOSTAT	
P-317-1	3/4"	E9	317-1	E9	3 #12				FOR GRIT ROOM HEATER	
C-317-1	1/2"	E9	317-1	E9			2	#12	FOR HEATER 317-1	
PC-317-3	3/4"	E9	317-3	E9	3 #12	MCC-21	2	#12	FOR $ 317-1 THERMOSTAT	
P-317-3	3/4"	E9	317-3	E9	3 #12				FOR GRIT ROOM HEATER	
C-317-3	1/2"	E9	317-3	E9			2	#12	FOR HEATER 317-3	
PC-317-7	3/4"	E9	317-7	E9	3 #12	MCC-21	2	#12	FOR $ 317-3 THERMOSTAT	
P-317-7	3/4"	E9	317-7	E9	3 #12				FOR HEATER 317-7	
C-317-7	1/2"	E9	317-7	E9			2	#12	FOR $ 317-7 THERMOSTAT	
P-319-2A	3/4"	E9	319-2	E9	3 #10	MCC-21			FOR DS-319-2 CHLORINATION ROOM HEATER	
P-319-2B	3/4"	E9	319-2	E9	3 #10				FOR HEATER 319-2	
C-319-2	1/2"	E9	319-2	E9			2	#12	FOR $ 319-2 THERMOSTAT	
P-320-1	1 1/4	320-2, 320-4	E9	6 #10	MCC-21				FOR CHLORINE STORAGE ROOM HEATERS	
P-320-2A	3/4"	320-2	E9	3 #10					FOR DS-320-2	
P-320-2B	3/4"	320-2	E9	3 #10					FOR HEATER 320-2	
C-320-2	1/2"	320-2	E9				2	#12	FOR $ 320-2 THERMOSTAT	
P-320-4A	3/4"	320-4	E9	3 #10					FOR DS 320-4	
P-320-4B	3/4"	320-4	E9	3 #10					FOR HEATER 320-4	
C-320-4	1/2"	320-4	E9				2	#12	FOR $ 320-4 THERMOSTAT	
PC-413-1	1 1/4	404, 405, 432	E9	7 #12	MCC-21				FOR FAN 413-1 & LOUVER 413-2L	
P-413-1F	3/4"	413-1F	E9	3 #12					FOR FAN MOTOR 413-1F	
P-413-1D	1/2"	413-1D	E9	2 #12					FOR DAMPER MOTOR 413-1D	
P-413-2A	3/4	413-2L	E9	3 #12					FOR FCC UNIT	
P-413-2B	5/4	413-2L	E9	3 #12					FOR LOUVER MOTOR 413-2L	
P-416-1A	1/2"	416-1	E9	2 #12	MCC-21 PNL-L4				FOR FAN 416-1 MOTOR CONTROLLER	
P-416-1B	3/4	416-1	E9	3 #12					FOR FAN 416-1F & DAMPER 416-1D	
P-416-1D	1/2"	416-1	E9	2 #12					FOR DAMPER MOTOR 416-1D	
P-416-1F	1/2"	416-1	E9	2 #12					FOR FAN MOTOR 416-1F	
PC-417-1	1/4"	417-1F, 1D	E9	5 #12	MCC-21		4	#12	FOR GRIT ROOM FAN	
P-417-1F	3/4"	417-1F	E9	3 #12					FOR FAN MOTOR 417-1F	
P-417-1D	1/2"	417-1D	E9	2 #12					FOR DAMPER MOTOR 417-1D	
C-417-1	3/4"	417-1F	E9				4	#12	FOR PB-417-1	
PC-417-2	1/4"	417-2F, 2D	E9	5 #12	MCC-21		6	#12	FOR GRIT ROOM FAN	
P-417-2F	3/4"	417-2F	E9	3 #12					FOR FAN MOTOR 417-2F	
P-417-2D	1/2"	417-2D	E9	2 #12					FOR DAMPER MOTOR 417-2D	
C-417-2A	3/4"	417-1F	E9				4	#12	FOR PB-417-2	
C-417-2B	1/2"	417-1F	E9				2	#12	FOR LIMIT SWITCH LS 417-2D	
PC-417-3	1/4"	417-3F, 3D	E9	5 #12	MCC-21		6	#12	FOR GRIT ROOM FAN	
P-417-3F	3/4"	417-3F	E9	3 #12					FOR FAN MOTOR 417-3F	
P-417-3D	1/2"	417-3D	E9	2 #12					FOR DAMPER MOTOR 417-3D	
C-417-3A	3/4"	417-3F	E9				4	#12	FOR PB-417-3	
C-417-3B	1/2"	417-3F	E9				2	#12	FOR LIMIT SWITCH LS-417-3D	
PC-419-1	1/4"	419-1F, 1D	E9	5 #12	MCC-21		4	#12	CHLORINATION ROOM FAN	
P-419-1A	3/4"	419-1F	E9	3 #12					FOR FAN MOTOR 419-1F	
P-419-1B	1/2"	419-1D	E9	2 #12					FOR DAMPER MOTOR 419-1D	
PC-419-2	1 1/4	419-2F, 2D	E9	5 #12	MCC-21		3	#12	CHLORINATION ROOM FAN	
P-419-2A	3/4"	419-2F	E9	3 #12					FOR FAN MOTOR 419-2F	
P-419-2B	1/2"	419-2D	E9	2 #12					FOR DAMPER MOTOR 419-2D	
C-419-1A	3/4"	419-1F	E9				4	#12	FOR PB's 419-1A, 419-2B	
C-419-1B	3/4"	419-2F	E9				3	#12	" " " " " "	
C-419-1C	1"	419-1F, 2F	E9				7	#12	" " " " " "	
C-419-1D	1"	419-1F, 2F	E9				6	#12	INTERCONNECTION BETWEEN PUSHBUTTONS	
C-419-1F	1/2"	419-1F	E9				2	#12	FOR LIMIT SWITCH LS-419-1D	
PC-420-1	1 1/4	420-1F, 1D	E9	5 #12	MCC-21		4	#12	CHLORINE STORAGE ROOM FAN	
P-420-1A	3/4"	420-1F	E9	3 #12					FOR FAN MOTOR 420-1F	
P-420-1B	1/2"	420-1D	E9	2 #12					FOR DAMPER MOTOR 420-1D	
C-420-1A	3/4"	420-1F	E9				4	#12	FOR PB-420-1A & 420-1AB	
C-420-1B	3/4"	420-1F	E9				3	#12	" " " " " "	
C-420-1C	1"	420-1F	E9				7	#12	" " " " " "	
C-420-1D	1"	420-1F	E9				6	#12	" " " " " "	
C-420-1F	1/2"	420-1D	E9				2	#12	INTERCONNECTION BETWEEN PUSHBUTTONS	
PC-420-2	1 1/4	420-2F, 2D	E9	5 #12	MCC-21		4	#12	FOR LIMIT SWITCH LS-420-1D	
P-420-2A	3/4"	420-2F	E9	3 #12					FOR RAW SEWAGE PUMP 103-1	
P-420-2B	1/2"	420-2D	E9	2 #12					FOR SEAL WATER VALVE FCV-536-1	
C-420-2A	3/4"	420-2F	E9				4	#12	FOR RAW SEWAGE PUMP - 103-2	
C-420-2B	3/4"	420-2F	E9				3	#12	FOR RAW SEWAGE PUMP 103-2	
C-420-2C	1"	420-2F	E9				7	#12	FOR SEAL WATER VALVE FCV-536-2	
C-420-2D	1"	420-2F	E9				6	#12	FOR RAW SEWAGE PUMP 103-3	
C-420-2F	1/2"	420-2F	E9				2	#12	FOR RAW SEWAGE PUMP 103-3	
PC-420-4	1 1/4	420-4F, 4D	E9	5 #12	MCC-21		4	#12	FOR SEAL WATER VALVE FCV-536-3	
P-420-4A	3/4"	420-4F	E9	3 #12					FOR SEAL WATER VALVES	
P-420-4B	3/4"	420-4F	E9	3 #12					FOR PB-103-1, 2, 3	
C-420-4A	3/4"	420-4F	E9				4	#12		
C-420-4B	3/4"	420-4F	E9				3	#12		
C-420-4C	1"	420-4F	E9				7	#12		
C-420-4D	1"	420-4F	E9				6	#12		
C-420-4F	1/2"	420-4F	E9				2	#12		
PC-420-5	1 1/4	420-5F, 5D	E9	5 #12	MCC-21		4	#12		
P-420-5A	3/4"	420-5F	E9	3 #12						
P-420-5B	1/2"	420-5D	E9	2 #12						
PC-420-2	1 1/4	420-2F, 2D	E9	5 #12	MCC-21		3	#12		
P-420-2A	3/4"	420-2F	E9	3 #12						
P-420-2B	1/2"	420-2D	E9	2 #12						
C-420-5A	3/4"	420-5F	E9				4	#12		
C-420-5B	3/4"	420-5F	E9				3	#12		
C-420-5C	1"	420-5F	E9				7	#12		
C-420-5D	1"	420-5F	E9				6	#12		
C-420-5F	1/2"	420-5F	E9				2	#12		
PC-420-6	1 1/4"	420-6F, 6D	E9	5 #12	MCC-21		4	#12		
P-420-6A	3/4"	420-6F	E9	3 #12						
P-420-6B	1/2"	420-6D	E9	2 #12						
C-420-6A	3/4"	420-6F	E9				4	#12		
C-420-6B	3/4"	420-6F	E9				3	#12		
C-420-6C	1"	420-6F	E9				7	#12		
C-420-6D	1"	420-6F	E9				6	#12		
C-420-6F	1/2"	420-6F	E9				2	#12		
P-103-1A	2 1/2"	103-1	E9	3 #1/0	MCC-22					
P-103-1B	2 1/2"	103-1	E9	3 #2/0						
C-103-1C	1 1/2"	103-1	E9	3 #1/0	MCC-22		2	#12		
P-103-2A	2 1/2"	103-2	E9	3 #1/0	MCC-22					
P-103-2B	2 1/2"	103-2	E9	3 #2/0						
C-103-2C	1 1/2"	103-2	E9				2	#12		
P-103-3A	2 1/2"	103-3	E9	3 #1/0	MCC-22					
P-103-3B	2 1/2"	103-3	E9	3 #2/0						
C-103-3C	1 1/2"	103-3	E9				2	#12		
C-103-3D	1"	103-3	E9				6	#12		

CONDUIT SCHEDULE SHEET FOR BREWERTON WATER POLLUTION CONTROL COMPLEX 2/11

IN CHARGE OF: F.A.L.
DESIGNED BY: W.K.
DRAWN BY: J.P.S.
CHECKED BY: W.K.

ROBSON & WOESE INC.
CONSULTING ENGINEERS
SYRACUSE NEW YORK

REVISIONS

ONONDAGA COUNTY DEPARTMENT OF PUBLIC WORKS
DIVISON OF DRAINAGE AND SANITATION
BREWERTON WATER POLLUTION
CONTROL PLANT
CONDUIT SCHEDULE
ELECTRICAL
TOWN OF CICERO ONONDAGA CO., N.Y.
BARTON, BROWN, CLYDE & LOGUIDICE
CONSULTING ENGINEERS & LAND SURVEYORS
NORTH SYRACUSE, NEW YORK
DATE: FEBRUARY 1975
SCALE: NONE
FILE NO.: 55.32-120F

E-26

405-1
30"W x 48"H Louver & Screen
w/ Elec. Operated Inside Louver
Top of Opening Elev. 388.50

405-2
30"W x 48"H Louver & Screen
w/Elec. Operated Inside Louver
Top of Opening Elev. 388.50

405-3
Roof Exhaust Fan
w/Elec. Operated Damper
27"x27" Thru Roof

GARAGE
FL. ELEV. 380.50

Power Wall Exhauster
(Kitchen Exhaust)

405-4
Roof Ventilator
w/Elec. Operated Damper
30"x54" Thru Roof

Kitchen

405-5
Roof Ventilator
w/ Elec. Operated Damper
30"x54" Thru Roof

405-6 Top
405-7 Bottom

405-8 Top
405-9 Bottom

405-10 - Top
405-11 - Bottom

Two Req'd (One Top, One Bottom) 7'-4" Height Overall
48"W x 44"H Louver & Screen
w/Elec. Operated Inside Louver
Top of Opening Elev. 389.83

FOYER
FL. ELEV. 380.50

DN.

4" SQ. OPENING IN FLOOR

24"x24" Duct to Basement
Terminate at Elev. 378.25

406-1
Roof Supply Fan
w/Elec. Operated
Damper.
30"x30" Thru Roof

406-2
Roof Supply Fan
w/Elec. Operated
Damper. Provide
Drip Pan
30"x30" Thru Roof

406-3
Roof Supply Fan
w/Elec. Operated
Damper. Provide
Drip Pan.
30"x30" Thru Roof

48"W x 72"H Louver & Screen
w/Elec. Operated Inside Louver
Top of Opening Elev. 388.50

406-6 406-7 406-8 406-9

Louver
By Gen. Contractor (CONT. 1A)

BLOWER ROOM
FL. ELEV. 380.50

406-4
Roof Exhaust Fan
w/Elec. Operated Damper
40"x40" Thru Roof

406-5
Roof Exhaust Fan
w/Elec. Operated Damper
40"x40" Thru Roof

Removable
Access Panel
(CONT. 1A)

401-1
Roof Exhaust Fan
w/Elec. Operated Damper
19"x19" Thru Roof

JANITOR ROOM
FL. ELEV. 380.50

403-1
Roof Exhaust Fan
17"x17"
Thru Roof

TOILET
FL. ELEV. 380.50

CONTROL ROOM
FL. ELEV. 380.50

401-2
30"W x 32"H Louver & Screen
w/ Elec. Operated
Inside Louver
Top of Opening
Elev. 387.83

PLAN

IN CHARGE OF: F.A.L.
DESIGNED BY: D.C.M.
DRAWN BY: J.B.S.
CHECKED BY: DCM

ONONDAGA COUNTY DEPARTMENT OF PUBLIC WORKS
DIVISION OF DRAINAGE AND SANITATION
BREWERTON WATER POLLUTION
CONTROL PLANT

CONTROL BUILDING
VENTILATING

TOWN OF CICERO ONONDAGA CO., N. Y.

BARTON, BROWN, CLYDE & LOGUIDICE
CONSULTING ENGINEERS & LAND SURVEYORS
NORTH SYRACUSE, NEW YORK

DATE: FEBRUARY, 1975
SCALE: 1/4"-1'-0"
FILE NO.: 55.32-121F

H-1

REVISIONS

411-1
Roof Exhaust Fan
w/ Elec. Operated Damper
22" x 22" Thru Slab

411-2
Roof Supply Fan
w/ Elec. Operated Damper
Provide Drip Pan
30" x 30" Thru Slab.

NORTH GALLERY

FL. ELEV. 368.00

NORTH GALLERY
PLAN

412-2
Roof Supply Fan
w/ Elec. Operated Damper
Provide Drip Pan
30" x 30" Thru Slab

SOUTH GALLERY

FL. ELEV. 368.00

412-1
Roof Exhaust Fan
w/ Elec. Operated Damper
22" x 22" Thru Slab

SOUTH GALLERY
PLAN

IN CHARGE OF: F.A.L.
DESIGNED BY: D.C.H.
DRAWN BY: J.P.S.
CHECKED BY: F.A.L.

ONONDAGA COUNTY DEPARTMENT OF PUBLIC WORKS
DIVISION OF DRAINAGE AND SANITATION
BREWERTON WATER POLLUTION CONTROL PLANT
GALLERIES
VENTILATING
TOWN OF CICERO ONONDAGA CO., N.Y.

REVISIONS

BARTON, BROWN, CLYDE & LOGUIDICE
CONSULTING ENGINEERS & LAND SURVEYORS
NORTH SYRACUSE, NEW YORK

DATE: FEBRUARY 1975
SCALE: 1/4" = 1'-0"
FILE NO.: 55.32-122F

H-2

Terminate Duct @ Elev. 360.00

24"
36"
Return Air Duct Up & Down

Offset 4" Pipe @ Elev. 368.00 (CONT. 1A)

COMMINUTOR ROOM

FL. ELEV. 358.00

UP

MOTOR ROOM

FL. ELEV. 360.50

DN

UP

Supply Air Duct Up & Down - Offset To clear Pipe Flange

48"
9"

PUMP ROOM

FL. ELEV. 345.00

UP

Terminate Duct @ Elev. 347.50

48"
9"

420-1
Wall Exhaust Fan w/ Elec. Operated Damper
Top of Opening Elev. 386.67
25"x25" Thru Wall

12"
26"
Down Duct Terminate @ Elev. 375.00

420-2
Wall Exhaust Fan w/ Elec. Operated Damper
Top of Opening Elev. 386.67
25"x25" Thru Wall

12"
26"
Down Duct Terminate @ Elev. 375.00

420-3
Wall Exhaust Fan w/ Elec. Operated Damper
Top of Opening Elev. 386.67
25"x25" Thru Wall

12"
26"
Down Duct Terminate @ Elev. 375.00

CHLORINE STORAGE ROOM

FL. ELEV. 374.00

420-4
Roof Supply Fan w/ Elec. Operated Damper. Provide Drip Pan.
30"x30" Thru Roof

2/60 (1)

420-5
Roof Supply Fan w/ Elec. Operated Damper. Provide Drip Pan
30"x30" Thru Roof

2/60 (1)

420-6
Roof Supply Fan w/ Elec. Operated Damper Provide Drip Pan
30"x30" Thru Roof

2/60 (1)

Up to Fan
24"
32"

417-1
Roof Exhaust Fan w/ Elec. Operated Damper
35"x35" Thru Roof

417-2
Roof Supply Fan w/ Elec. Operated Damper Provide Drip Pan
30"x30" Thru Roof

2/10 (2)

OBSERVATION WINDOW

Down Duct Terminate @ Elev. 377.00
26"

419-2
Wall Exhaust Fan w/ Elec. Operated Damper
Top of Opening Elev. 386.67
25"x25" Thru Wall

CHLORINATION ROOM
FL. ELEV. 376.00

419-1
Roof Supply Fan w/ Elec. Operated Damper. Provide Drip Pan.
30"x30" Thru Roof

2/60 (1)

OBSERVATION WINDOW

GRIT REMOVAL ROOM

FL. ELEV. 376.00

DN

413-1
Roof Exhaust Fan w/ Elec. Operated Damper
22"x22" Thru Roof

MOTOR CONTROL ROOM

FL. ELEV. 376.00

417-3
Roof Supply Fan w/ Elec. Operated Damper Provide Drip Pan
30"x30" Thru Roof

2/10 (2)

DN

Explosion Proof Area

416-1
Roof Exhaust Fan w/ Elec. Operated Damper
17"x17" Thru Roof

STORAGE ROOM

FL. ELEV. 376.00

Down Duct Offset to Clear Wall

48"
9"

16"W x 24"H Louver & Screen w/ Manual Operated Inside Louver
Top of Opng Elev. 382.00

413-2
48"W x 40"H Louver & Screen w/ Elec. Operated Inside Louver
Top of Opening Elev. 383.33

PLAN

NOTE:
Provide Access Doors in Duct Work For Motors Mounted on Louvers.

IN CHARGE OF: F.A.L.
DESIGNED BY: D.C.M.
DRAWN BY: J.P.S.
CHECKED BY: F.A.L.

ONONDAGA COUNTY DEPARTMENT OF PUBLIC WORKS
DIVISION OF DRAINAGE AND SANITATION
BREWERTON WATER POLLUTION CONTROL PLANT

RAW SEWAGE PUMPING STATION
VENTILATING

TOWN OF CICERO ONONDAGA CO., N.Y.

BARTON, BROWN, CLYDE & LOGUIDICE
CONSULTING ENGINEERS & LAND SURVEYORS
NORTH SYRACUSE, NEW YORK

DATE: FEBRUARY 1975
SCALE: 1/4" = 1'-0"
FILE NO.: 55.32-123F

H-3

REVISIONS

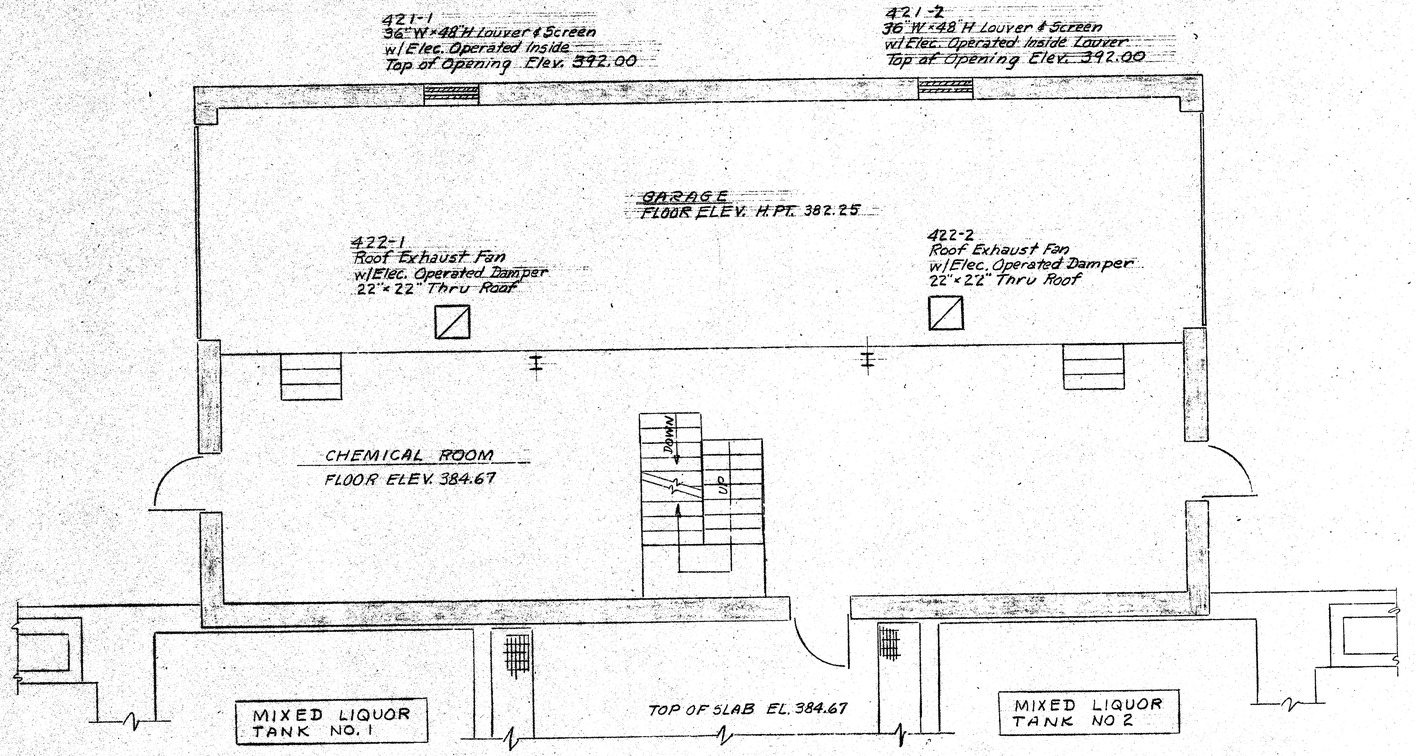

PLAN
N.T.S.

IN CHARGE OF: F.A.L.
DESIGNED BY: D.C.M.
DRAWN BY: D.C.M.
CHECKED BY: DCM

ONONDAGA COUNTY DEPARTMENT OF PUBLIC WORKS
DIVISION OF DRAINAGE AND SANITATION
BREWERTON WATER POLLUTION CONTROL PLANT
CHEMICAL BUILDING
VENTILATING
TOWN OF CICERO ONONDAGA CO., N.Y.

REVISIONS

BARTON, BROWN, CLYDE & LOGUIDICE
CONSULTING ENGINEERS & LAND SURVEYORS
NORTH SYRACUSE, NEW YORK

DATE: FEBRUARY 1975
SCALE: AS SHOWN
FILE NO.: 55.32-124F

H-4

FAN SCHEDULE

FAN No.	SERVICE	LOCATION	TYPE	CFM	MAX. T/P SPEED	FAN RPM	FAN DIA.	S.P.	DRIVE	MOTOR RPM	HP	VOLTS	Ø	STARTER SIZE	DESIGN BASED ON FOLLOWING
401-1	CONTROL RM. EXH.	ROOF	ROOF	1379	3690	940	15	1/4	BELT	1200	1/4	120	1		CARNES ERBA-15-L3
403-1	TOILET EXH.	ROOF	ROOF	469	2772	820	13	1/4	BELT	1200	1/6	120	1		CARNES ERBA-13-K3
405-3	GARAGE EXH.	ROOF	ROOF	3741	3272	505	24	1/4	BELT	900	3/4	480	3		CARNES ERBA-24-R4
406-1	BLOWER RM. BASE. INT.	ROOF	ROOF	3030		750	24	3/8	BELT		1/2	480	3		COOLAIR KBS-2450-Q
406-2	BLOWER RM. INT.	ROOF	ROOF	3050		750	24	3/8	BELT		1/2	480	3		COOLAIR KBS-2450-Q
406-3	BLOWER RM. INT.	ROOF	ROOF	3050		750	24	3/8	BELT		1/2	480	3		COOLAIR KBS-2450-Q
406-4	BLOWER RM. EXH.	ROOF	ROOF	12,076	4084	425	36	1/4	BELT	720	2	480	3		CARNES ERBA-36-V5
406-5	BLOWER RM. EXH.	ROOF	ROOF	12,076	4084	425	36	1/4	BELT	720	2	480	3		CARNES ERBA-36-V5
411-1	NORTH GALLERY EXH.	ROOF	ROOF	4025	4395	805	20	1/4	BELT	900	3/4	480	3		CARNES ERBA-20-R4
411-2	NORTH GALLERY INT.	ROOF	ROOF	4800		845	24	3/8	BELT		3/4	480	3		COOLAIR KBS-2475-M
412-1	SOUTH GALLERY EXH.	ROOF	ROOF	4025	4395	805	20	1/4	BELT	900	3/4	480	3		CARNES ERBA-20-R4
412-2	SOUTH GALLERY INT.	ROOF	ROOF	4800		845	24	3/8	BELT		3/4	480	3		COOLAIR KBS-2475-M
413-1	MOTOR CONTROL RM. EXH.	ROOF	ROOF	2683	3303	605	20	1/4	BELT	1200	1/2	480	3		CARNES ERBA-20-P3
416-1	STORAGE RM. EXH.	ROOF	ROOF	367	2732	870	12	1/4	BELT		1/6	120	1		CARNES ERBA-12-K3
417-1	COMMUNITOR RM EXH.	ROOF	ROOF	4747	3671	460	30	1/2	BELT	900	1	480	3		CARNES ERBA-30-S4
417-2	GRIT REMOVAL RM. INT.	ROOF	ROOF	5300		950	24	1/2	BELT		1	480	3		COOLAIR KBS-2410-M
417-3	GRIT REMOVAL RM. INT.	ROOF	ROOF	5300		950	24	1/2	BELT		1	480	3		COOLAIR KBS-2410-M
419-1	CHLOR. RM. INT.	ROOF	ROOF	4750		750	24	1/4	BELT		1/2	480	3		COOLAIR KBS-2450-Q
419-2	CHLOR. RM. EXH.	WALL	WALL	4750	5135	800		1/4	BELT		1	480	3		PENN DOME WLB-452
420-1	CHLOR. STORAGE EXH.	WALL	WALL	4750	5135	800		1/4	BELT		1	480	3		PENN DOME WLB-452
420-2	CHLOR. STORAGE EXH.	WALL	WALL	4750	5135	800		1/4	BELT		1	480	3		PENN DOME WLB-452
420-3	CHLOR. STORAGE EXH.	WALL	WALL	4750	5135	800		1/4	BELT		1	480	3		PENN DOME WLB-452
420-4	CHLOR. STORAGE INT.	ROOF	ROOF	4750		750	24	1/4	BELT		1/2	480	3		COOLAIR KBS-2450-Q
420-5	CHLOR. STORAGE INT.	ROOF	ROOF	4750		750	24	1/4	BELT		1/2	480	3		COOLAIR KBS-2450-Q
420-6	CHLOR. STORAGE INT.	ROOF	ROOF	4750		750	24	1/4	BELT		1/2	480	3		COOLAIR KBS-2450-Q
422-1	CHEM. BLDG. EXH.	ROOF	ROOF	4025	4395	805	20	1/4	BELT	900	3/4	480	3		CARNES ERBA-20-R4
422-2	EAST GALLERY EXH.	ROOF	ROOF	4025	4395	805	20	1/4	BELT	900	3/4	480	3		CARNES ERBA-20-R4

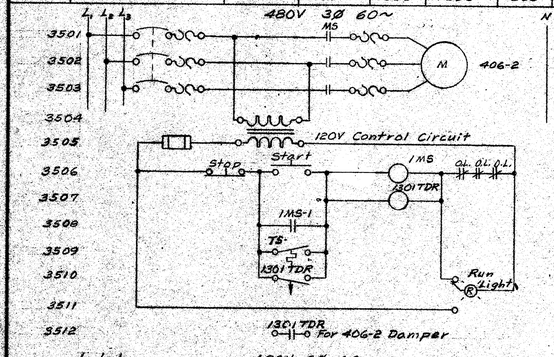

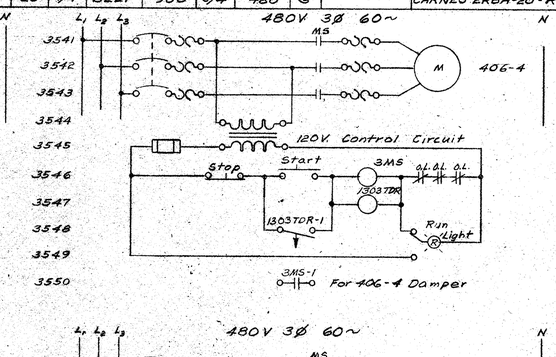

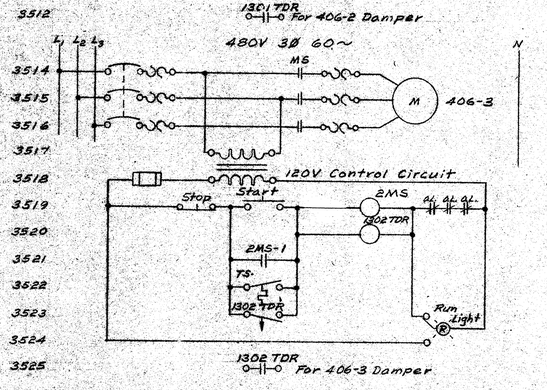

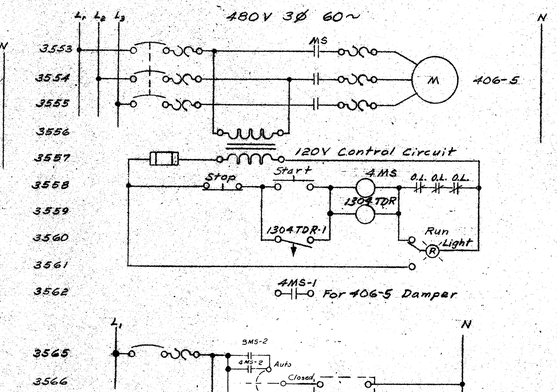

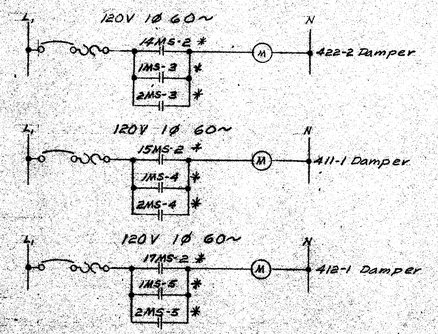

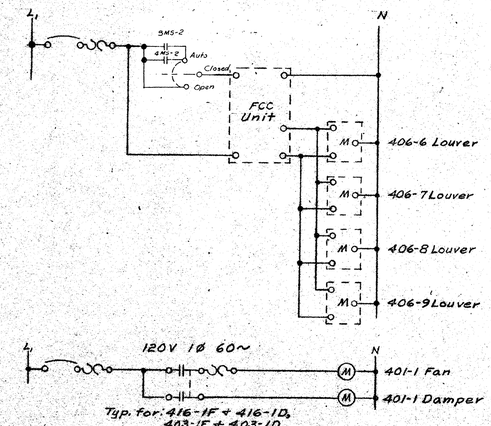

Notes:
1. Mount Selector Swith in Blower Room.

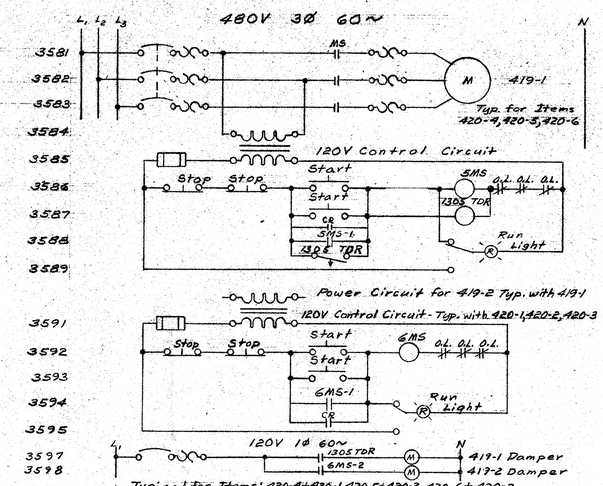

Item No.	MS	TDR	LS
419-1	5MS	1305TDR	
419-2	6MS		
420-1	7MS		
420-2	8MS		
420-3	9MS		
420-4	10MS	1306TDR	
420-5	11MS	1307TDR	
420-6	12MS	1308TDR	

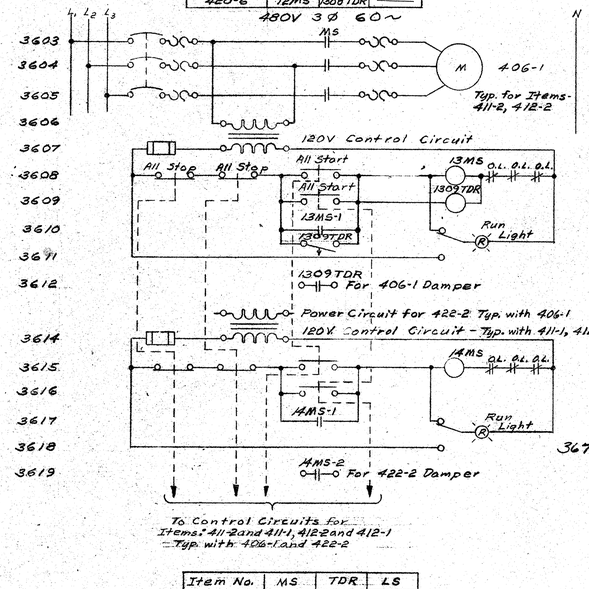

Item No.	MS	TDR	LS
411-1	15MS		
411-2	16MS	1310TDR	
412-1	17MS		
412-2	18MS	1311TDR	
406-1	13MS	1309TDR	
422-2	14MS		

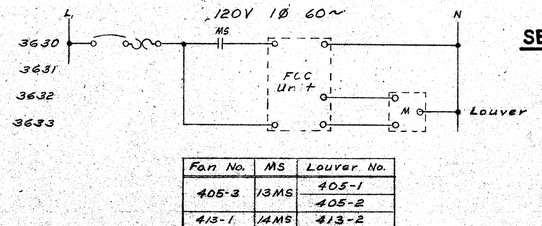

Fan No.	MS	Louver No.
405-3	13MS	405-1
		405-2
413-1	14MS	413-2
422-1	15MS	421-1
		421-2

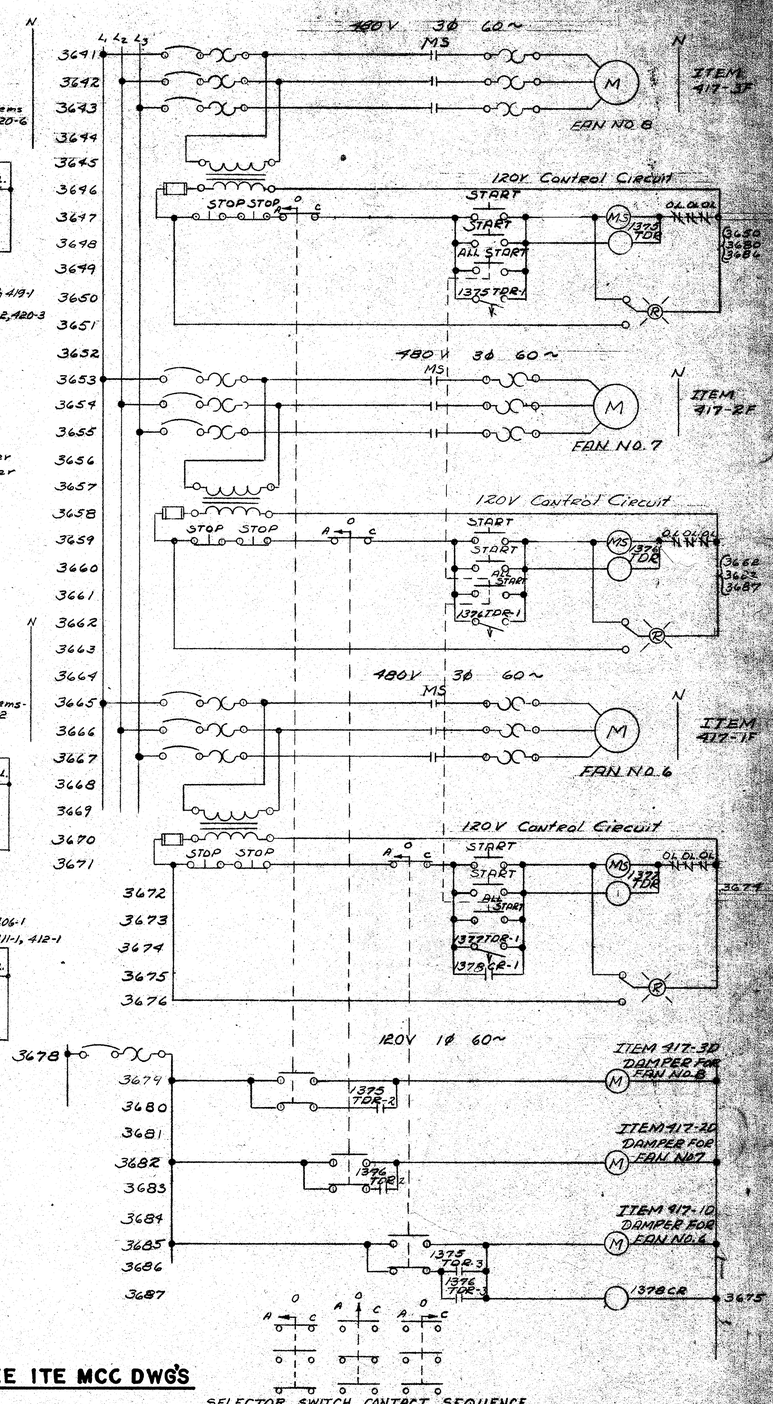

SEE ITE MCC DWG'S

IN CHARGE OF: F.A.L.
DESIGNED BY: D.C.M.
DRAWN BY: JCR
CHECKED BY: MCW

ONONDAGA COUNTY DEPARTMENT OF PUBLIC WORKS
DIVISION OF DRAINAGE AND SANITATION
BREWERTON WATER POLLUTION CONTROL PLANT

MISCELLANEOUS DETAILS

VENTILATING

TOWN OF CICERO — ONONDAGA CO., N.Y.

BARTON, BROWN, CLYDE & LOGUIDICE
CONSULTING ENGINEERS & LAND SURVEYORS
NORTH SYRACUSE, NEW YORK

DATE: FEBRUARY 1975
SCALE: NONE
FILE NO.: 55.32-125F

REVISIONS

H-5

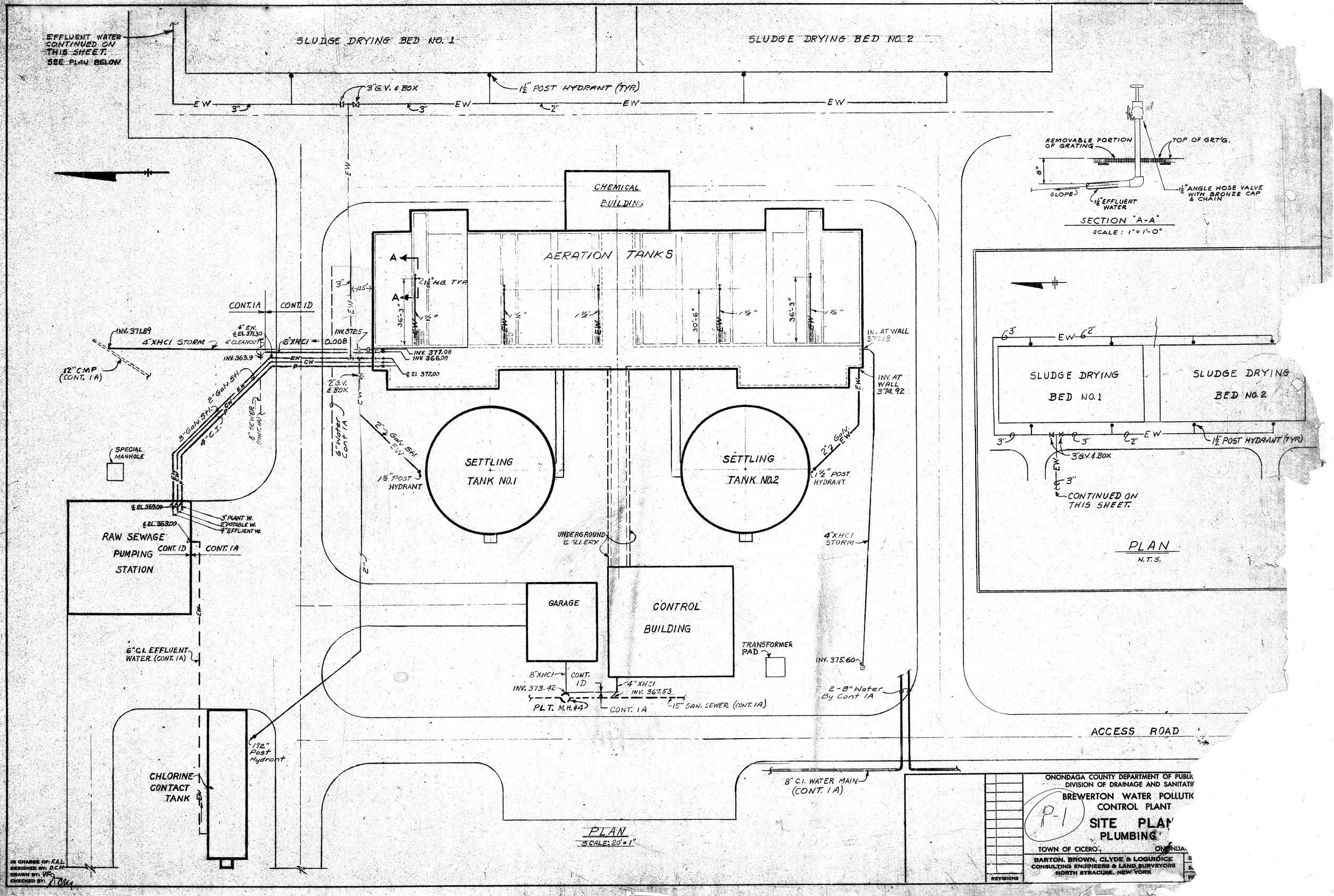

EFFLUENT WATER CONTINUED ON THIS SHEET. SEE PLAN BELOW
SLUDGE DRYING BED NO. 1
SLUDGE DRYING BED NO. 2
3" G.V. & BOX
1½" POST HYDRANT (TYP.)
EW
CHEMICAL BUILDING
AERATION TANKS
A
2 1½" H.B. TYP.
36'-3"
30'-6"
1½"
CONT. 1A
CONT. 1D
INV. 371.89
4" XHCI STORM
4" E.W. ℄ EL. 371.30
4" CLEANOUT
6" XHCI
0.008
INV. 372.15
INV. 377.08
INV. 366.08
℄ EL. 372.00
INV. 363.9
12" CMP (CONT. 1A)
2" G.V. & BOX
2" Galv. Stl.
3" Galv. Stl.
4" C.I.
8" SEWER (CONT. 1A)
6" Water Cont 1A
SPECIAL MANHOLE
SETTLING TANK NO. 1
SETTLING TANK NO. 2
1½" POST HYDRANT
INV. AT WALL 377.18
INV. AT WALL 374.92
℄ EL. 369.00
℄ EL. 363.00
3" PLANT W.
2" POTABLE W.
4" EFFLUENT W.
RAW SEWAGE PUMPING STATION
UNDERGROUND GALLERY
4" XHCI STORM
GARAGE
CONTROL BUILDING
TRANSFORMER PAD
INV. 375.60
6" C.I. EFFLUENT WATER (CONT. 1A)
8" XHCI
CONT. 1D
INV. 373.42
4" XHCI
INV. 367.53
PLT. M.H. #4
CONT. 1A
15" SAN. SEWER (CONT. 1A)
2-8" Water By Cont 1A
ACCESS ROAD
1½" Post Hydrant
CHLORINE CONTACT TANK
8" C.I. WATER MAIN (CONT. 1A)
PLAN
SCALE: 20'=1"
REMOVABLE PORTION OF GRATING
TOP OF GRT'G.
8"
SLOPE
1½" EFFLUENT WATER
1½" ANGLE HOSE VALVE WITH BRONZE CAP & CHAIN
SECTION "A-A"
SCALE: 1"=1'-0"
SLUDGE DRYING BED NO. 1
SLUDGE DRYING BED NO. 2
3" G.V. & BOX
CONTINUED ON THIS SHEET.
PLAN
N.T.S.
IN CHARGE OF: F.A.L.
DESIGNED BY: D.C.M.
DRAWN BY: VF
CHECKED BY:
REVISIONS
ONONDAGA COUNTY DEPARTMENT OF PUBLIC
DIVISION OF DRAINAGE AND SANITATIO
BREWERTON WATER POLLUTIO
CONTROL PLANT
P-1
SITE PLAN
PLUMBING
TOWN OF CICERO
ONONDA
BARTON, BROWN, CLYDE & LOGUIDICE
CONSULTING ENGINEERS & LAND SURVEYORS
NORTH SYRACUSE, NEW YORK

PLAN @ EL. 372.00
SCALE: 1/4" = 1'-0"

PLAN @ EL. 357.00
SCALE: 1/4" = 1'-0"

PLAN @ EL. 380.00
SCALE: 1/4" = 1'-0"

SECTION "A-A"
SCALE: 1/8" = 1'-0"

SECTION "B-B"
SCALE: 1/8" = 1'-0"

ONONDAGA COUNTY DEPARTMENT OF PUBLIC WORKS
DIVISION OF DRAINAGE AND SANITATION
BREWERTON WATER POLLUTION CONTROL PLANT
RAW SEWAGE PUMPING STATION
PLUMBING
TOWN OF CICERO ONONDAGA CO., N.Y.

BARTON, BROWN, CLYDE & LOGUIDICE
CONSULTING ENGINEERS & LAND SURVEYORS
NORTH SYRACUSE, NEW YORK

DATE: FEBRUARY 1975
SCALE: AS SHOWN
FILE NO.: 55.32-1278

P-2

IN CHARGE OF: P.A.L.
DESIGNED BY: D.C.M.
DRAWN BY: V.F.
CHECKED BY:

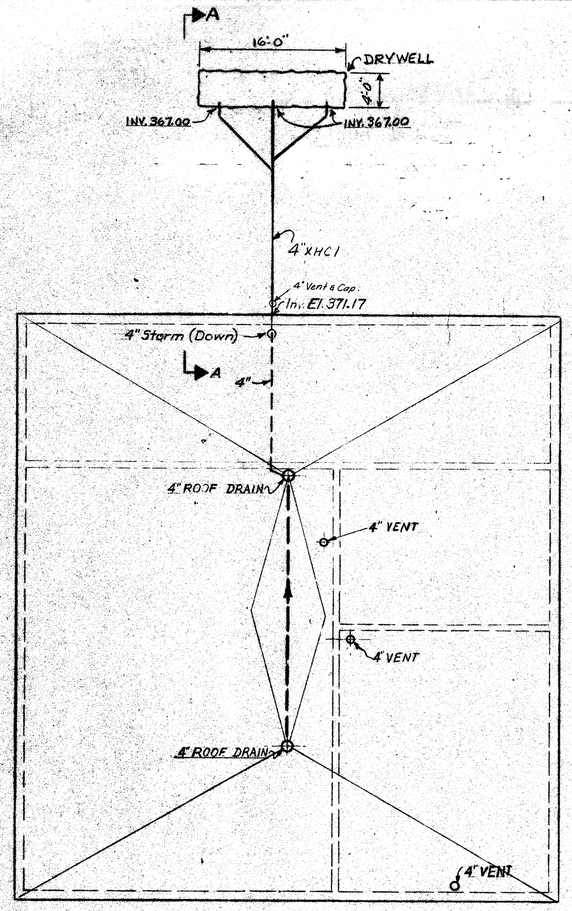

ROOF DRAIN PLAN

SCALE: 1/8" = 1'-0"

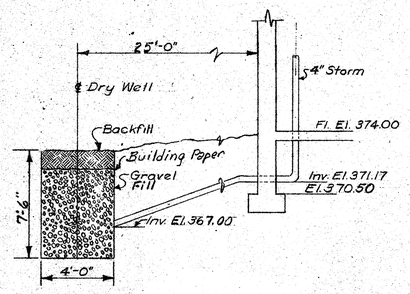

SECTION A-A

N. T. S.

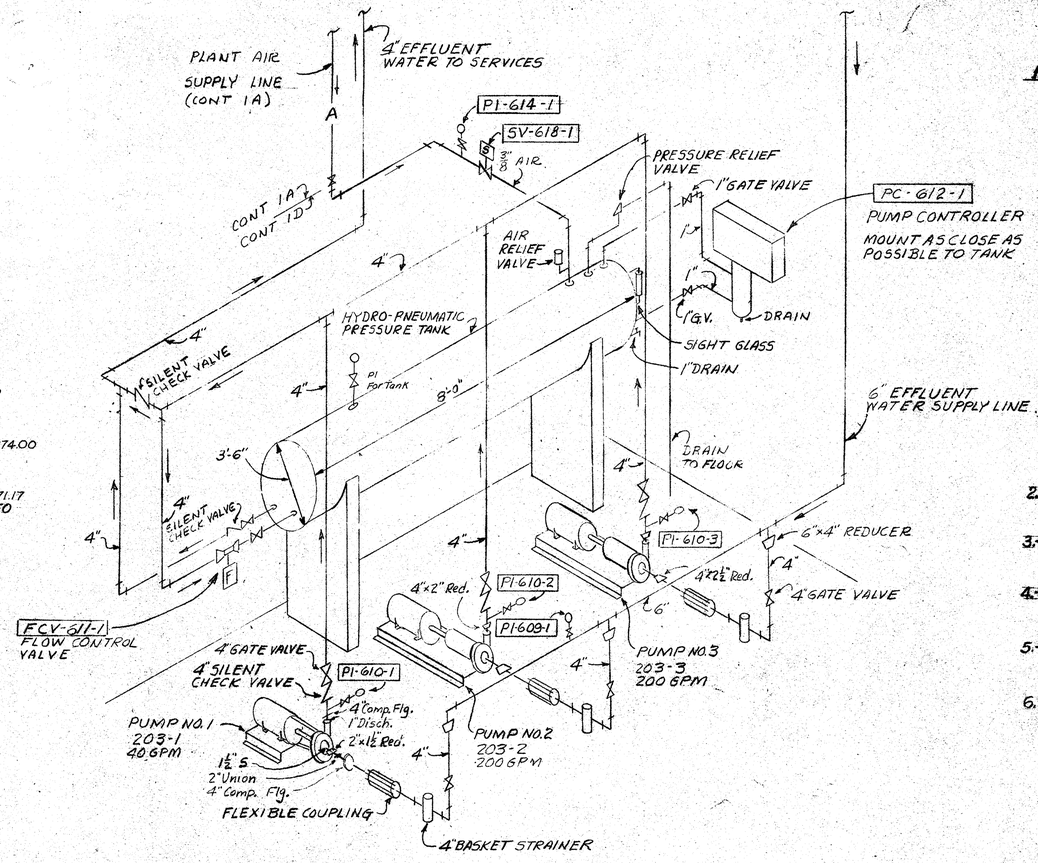

SCHEMATIC DIAGRAM

EFFLUENT WATER SYSTEM

NO SCALE

NOTES.-

1- THE THREE WATER SYSTEMS SHALL BE POTABLE WATER, PLANT W. & EFFLUENT W. THE USE OF THE WATER IS DESCRIBED AS FOLLOWS:

POTABLE WATER

TOILET FACILITIES (EXCEPT U & WC)
HOT WATER HEATER (CONT. BLDG. ONLY)
WATER COOLERS

PLANT WATER

SERVICE SINKS
HEAT EXCH. (STANDBY)
CHLORINE INJECTOR (STANDBY)
H.W. HEATERS (EXCEPT CONT. BLDG.)
PUMP WATER SEALS
INTERIOR HOSE BIBBS
RESIDUAL ANALYZER
EXT. HOSE BIBB (R.S. PUMP STA. ONLY)

EFFLUENT WATER

EXTERIOR POST HYDRANTS & HOSE BIBBS
CHLORINE INJECTOR
HEAT EXCHANGER (GENERATOR)

2.- ALL FLOOR DRAINS AND FIXTURES SHALL BE TRAPPED.

3.- ALL UNDERGROUND PRESSURE PIPING:
150# C.I. - 4"
SCH. 40 GALV. S'L - 3", 2", & 1½"

4.- ALL INTERIOR PRESSUPE PIPING:
150 # C.I. - 8" & 6"
SCH. 40 GALV. S'L - 4", 3", 2" & 1½"
SMALLER THAN 1½" - TYPE "L" COPPER

5.- ALL INTERIOR EXPOSED DRAIN PIPING TYPE M- COPPER

6.- UNDERGROUND & UNEXPOSED DRAIN PIPING XHC1

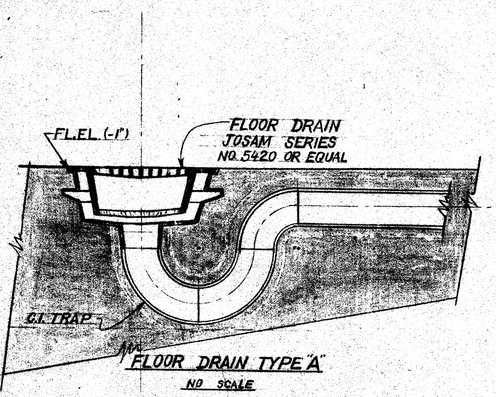

FLOOR DRAIN TYPE "A"

NO SCALE

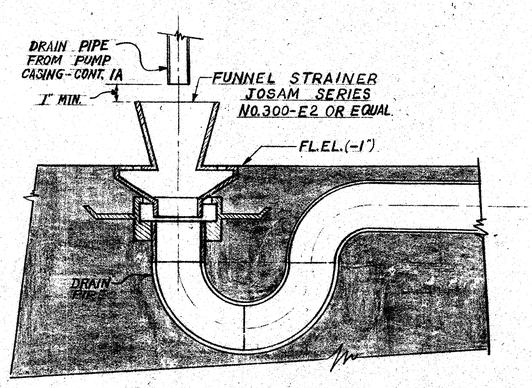

FLOOR DRAIN TYPE "B"

NO SCALE

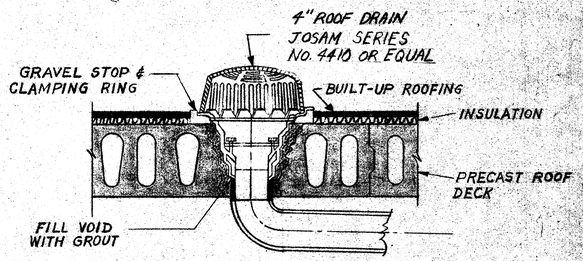

ROOF DRAIN DETAIL

NO SCALE

IN CHARGE OF: F.A.L.
DESIGNED BY: D.C.M.
DRAWN BY: VF
CHECKED BY: DCM

ONONDAGA COUNTY DEPARTMENT OF PUBLIC WORKS
DIVISION OF DRAINAGE AND SANITATION
BREWERTON WATER POLLUTION CONTROL PLANT
RAW SEWAGE PUMPING STATION
PLUMBING
TOWN OF CICERO ONONDAGA CO., N.Y.

BARTON, BROWN, CLYDE & LOGUIDICE
CONSULTING ENGINEERS & LAND SURVEYORS
NORTH SYRACUSE, NEW YORK

REVISIONS

DATE: FEBRUARY 1975
SCALE: AS NOTED
FILE NO.: 55.32-128F

P-5

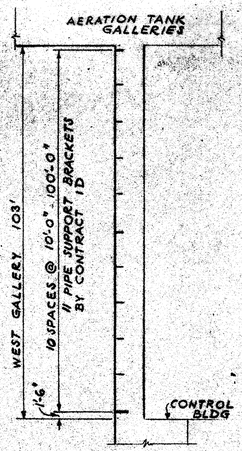

SUPPORT PLAN "D"

SCALE: 1" = 20'-0"

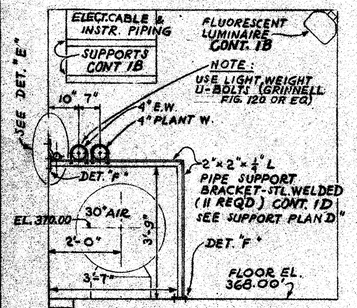

ENLARGED SECTION C-C

SCALE: ½" = 1'-0"

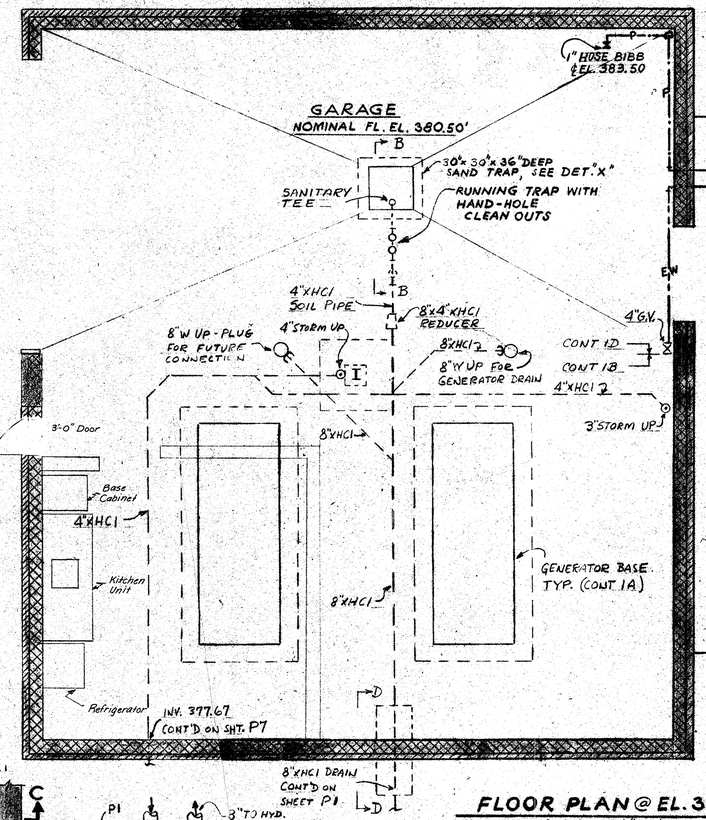

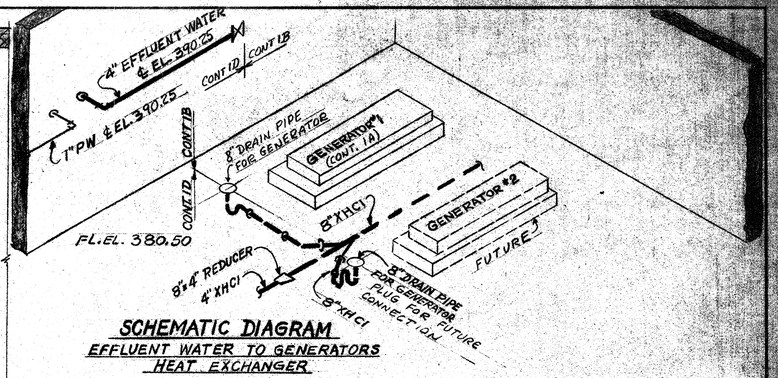

SCHEMATIC DIAGRAM

EFFLUENT WATER TO GENERATORS HEAT EXCHANGER

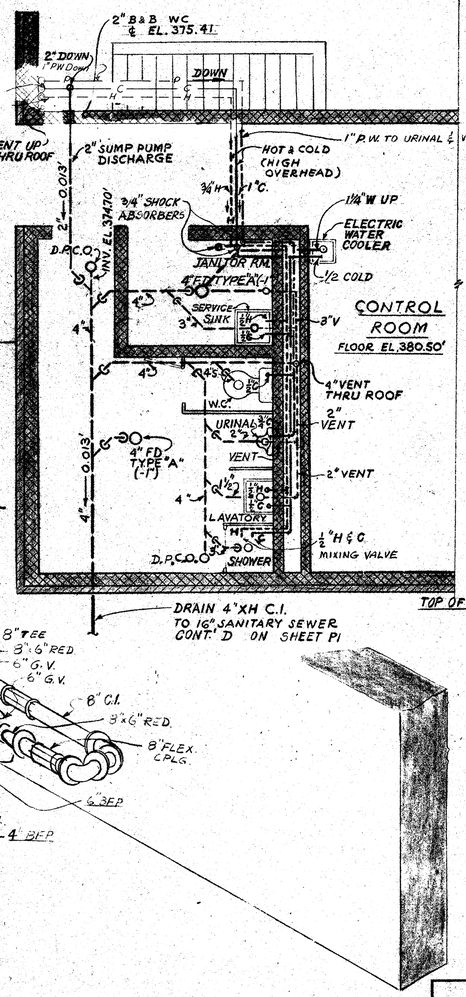

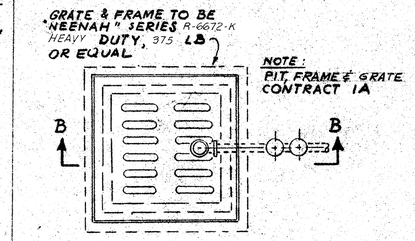

PLAN - GRATE & FRAME

DETAIL "X"

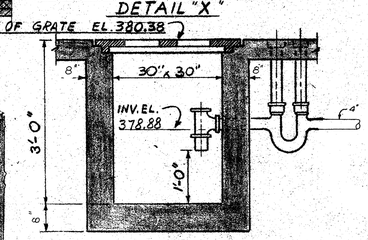

SECT. "B-B"

N.T.S.

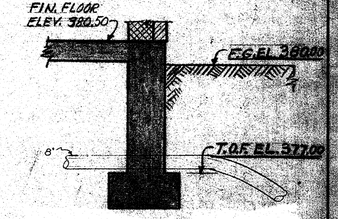

SECTION "D-D"

SCALE: ½" = 1'-0"

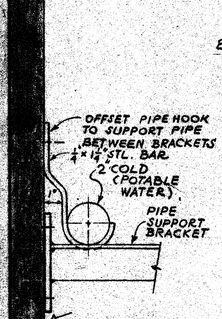

DETAIL "E"

SCALE: 3" = 1'-0"

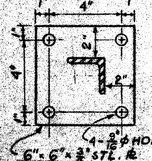

DETAIL "F"

SCALE: 3" = 1'-0"

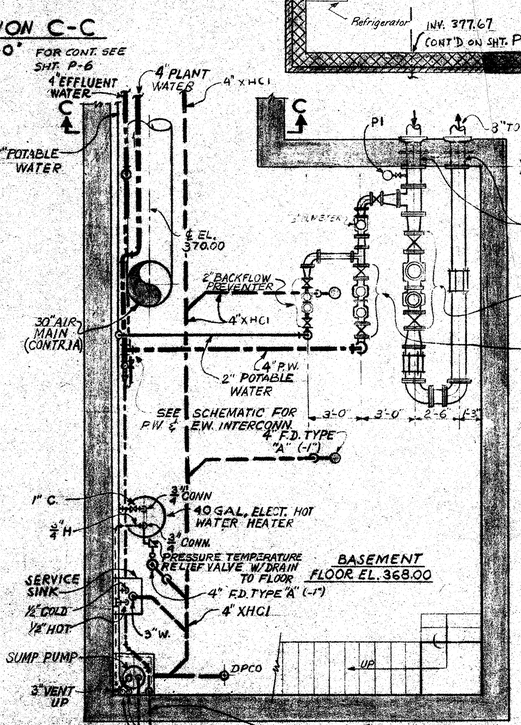

PLAN @ EL. 375.00

PLANT WATER SYSTEM

SCALE: ½" = 1'-0"

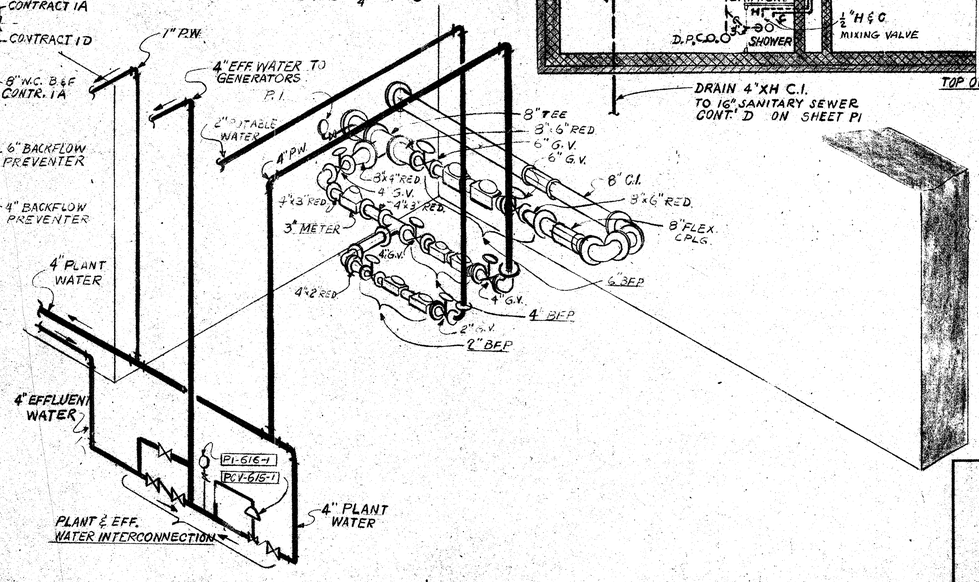

SCHEMATIC DIAGRAM

PLANT WATER SYSTEM

NO SCALE

IN CHARGE OF: F.A.L.
DESIGNED BY: D.C.M.
DRAWN BY: V.F.O.
CHECKED BY:

REVISIONS

ONONDAGA COUNTY DEPARTMENT OF PUBLIC WORKS
DIVISION OF DRAINAGE AND SANITATION
BREWERTON WATER POLLUTION CONTROL PLANT

CONTROL BUILDING PLUMBING

TOWN OF CICERO ONONDAGA CO., N.Y.

BARTON, BROWN, CLYDE & LOGUIDICE
CONSULTING ENGINEERS & LAND SURVEYORS
NORTH SYRACUSE, NEW YORK

DATE: FEBRUARY 1975
SCALE: AS SHOWN
FILE NO.: 55.32-129F

P-4

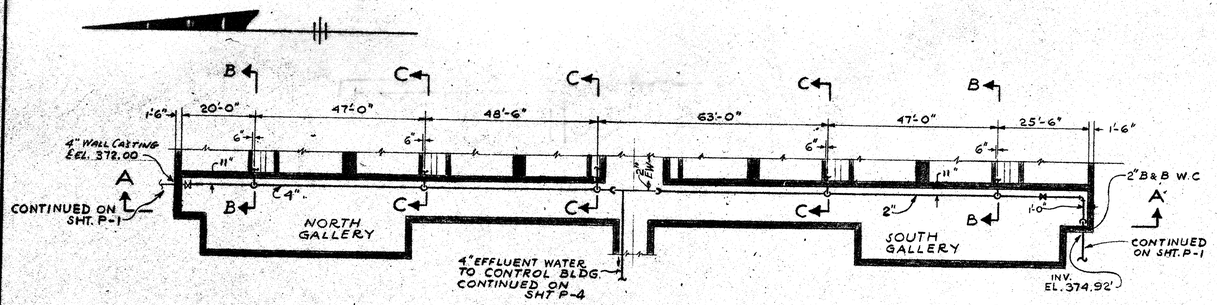

EFFLUENT WATER PIPING - PLAN

SCALE : 1" = 20'-0"

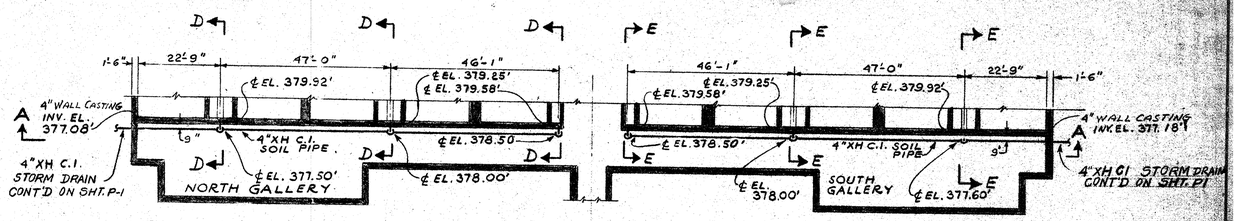

"Y" PORTION DRAIN PIPING - PLAN

SCALE : 1" = 20'-0"

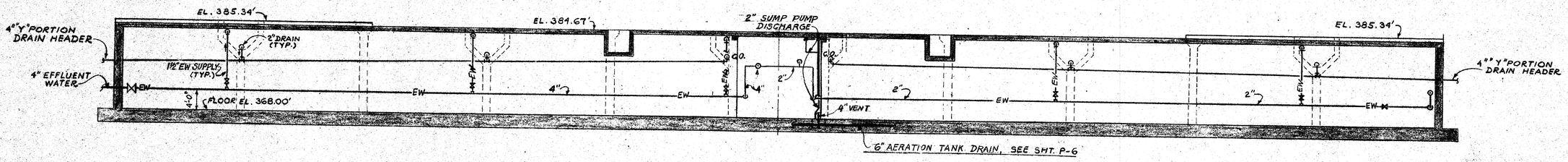

ENLARGED SECTION A-A (ELEVATION LOOKING EAST)

SCALE : 1" = 10'-0"

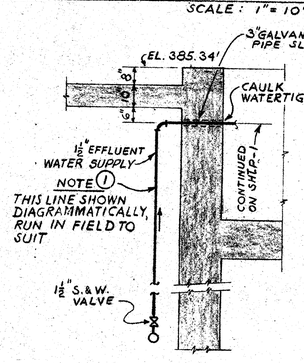

SECTION "B-B"

SCALE : ⅜" = 1'-0"

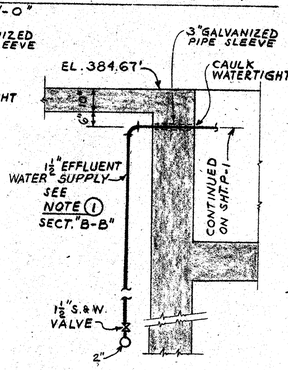

SECTION "C-C"

SCALE : ⅜" = 1'-0"

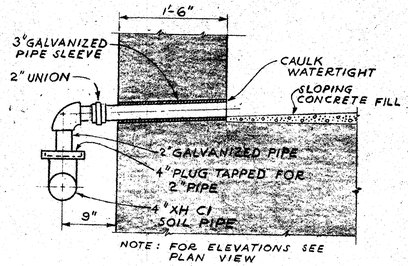

NOTE : FOR ELEVATIONS SEE PLAN VIEW

SECTION "D-D" AS SHOWN

SECTION "E-E" OPPOSITE HAND

SCALE : 1" = 1'-0"

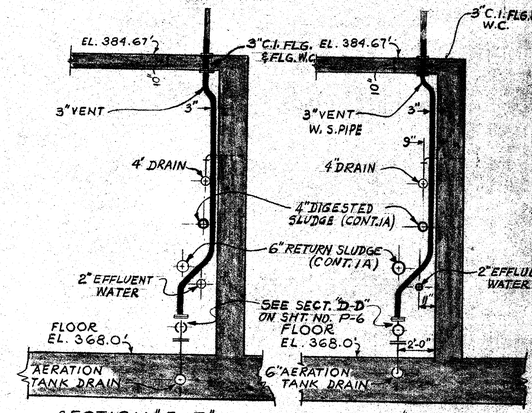

SECTION "F-F"

SCALE : ¼" = 1'-0"

SECTION "G-G"

SCALE : ¼" = 1'-0"

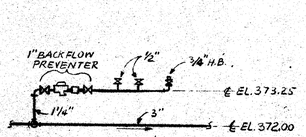

SECTION "X-X"

NO SCALE

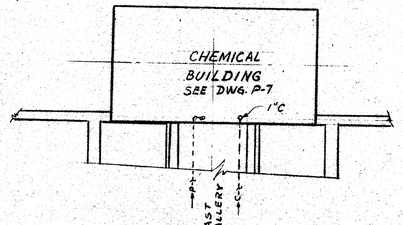

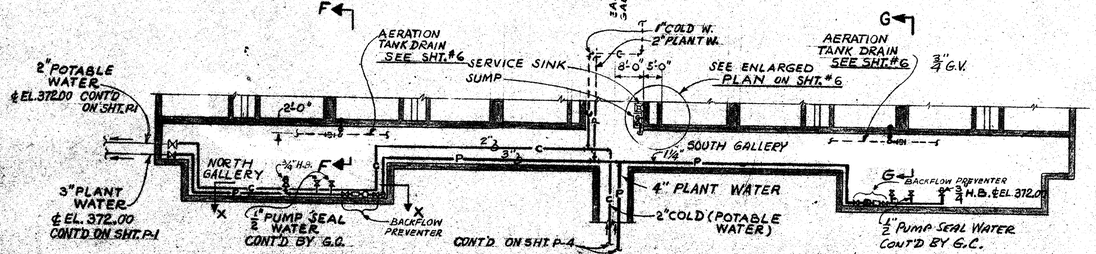

POTABLE & PLANT WATER - PLAN

SCALE : 1" = 20'-0"

IN CHARGE OF: F.A.L.
DESIGNED BY: D.C.M.
DRAWN BY: V.P.F.
CHECKED BY:

ONONDAGA COUNTY DEPARTMENT OF PUBLIC WORKS
DIVISION OF DRAINAGE AND SANITATION

BREWERTON WATER POLLUTION CONTROL PLANT

AERATION TANKS

PLUMBING

TOWN OF CICERO — ONONDAGA CO., N.Y.

BARTON, BROWN, CLYDE & LOGUIDICE
CONSULTING ENGINEERS & LAND SURVEYORS
NORTH SYRACUSE, NEW YORK

DATE: FEBRUARY 1975
SCALE: AS SHOWN
FILE NO.: 5532-130F

P-5

REVISIONS

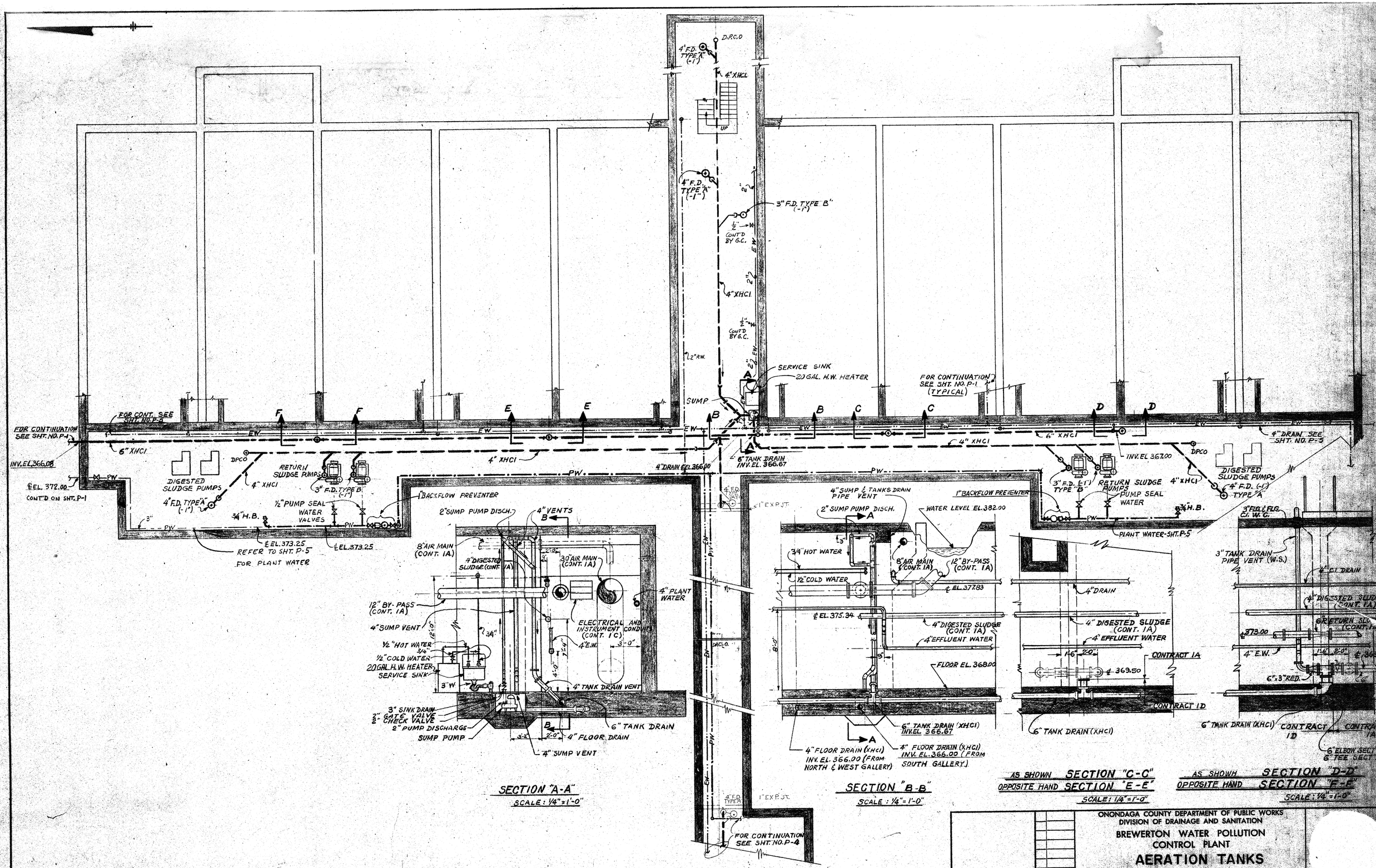

SECTION "A-A"
SCALE: ¼"=1'-0"

SECTION "B-B"
SCALE: ¼"=1'-0"

AS SHOWN SECTION "C-C"
OPPOSITE HAND SECTION "E-E"
SCALE: ¼"=1'-0"

AS SHOWN SECTION "D-D"
OPPOSITE HAND SECTION "F-F"
SCALE: ¼"=1'-0"

PLAN
SCALE: ⅛"=1'-0"

IN CHARGE OF: F.A.L.
DESIGNED BY: D.C.M.
DRAWN BY: VF
CHECKED BY:

REVISIONS

ONONDAGA COUNTY DEPARTMENT OF PUBLIC WORKS
DIVISION OF DRAINAGE AND SANITATION
BREWERTON WATER POLLUTION CONTROL PLANT

AERATION TANKS
PLUMBING

TOWN OF CICERO ONONDAGA CO., N.Y.

BARTON, BROWN, CLYDE & LOGUIDICE
CONSULTING ENGINEERS & LAND SURVEYORS
NORTH SYRACUSE, NEW YORK

DATE: FEBRUARY 1975
SCALE: AS SHOWN
FILE NO.: 55.32-131F

P-2

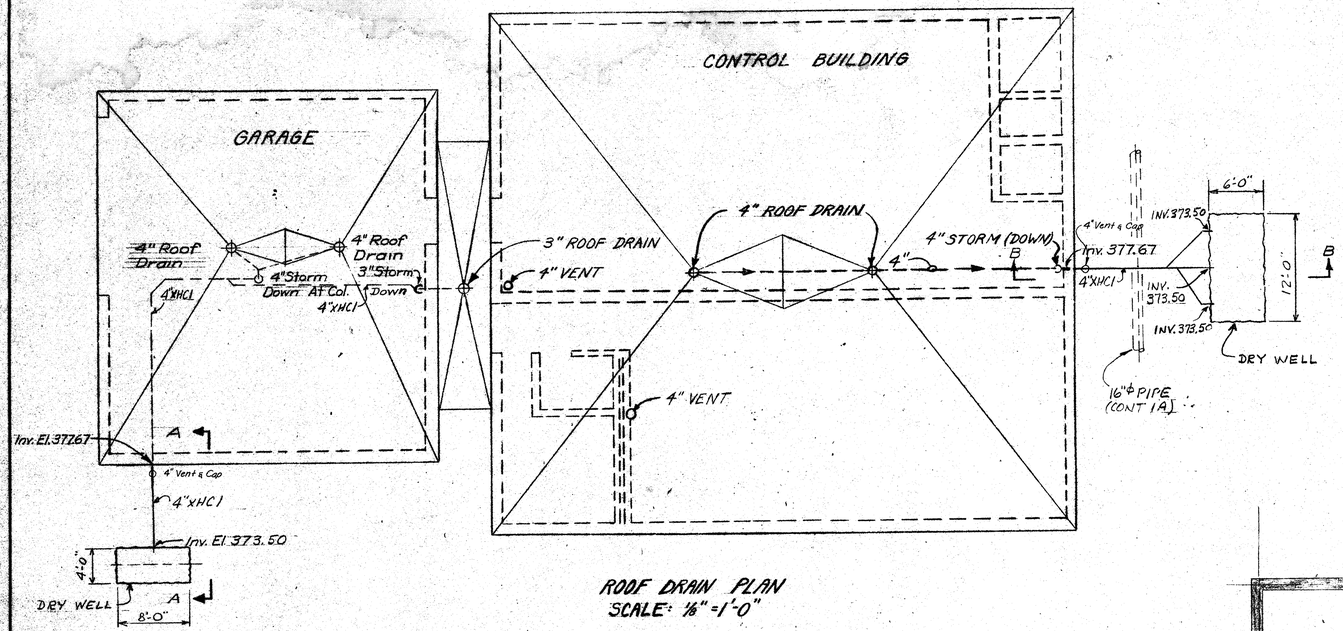

ROOF DRAIN PLAN
SCALE: 1/8" = 1'-0"

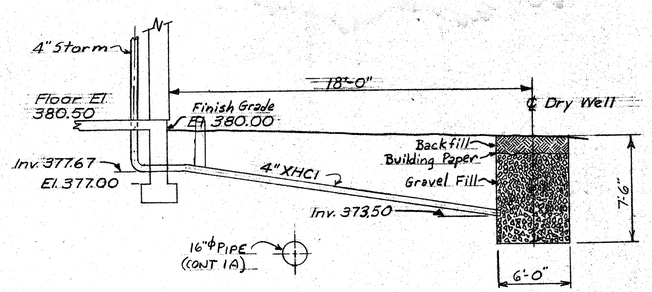

SECTION B-B
Scale: 1/4" = 1'-0"

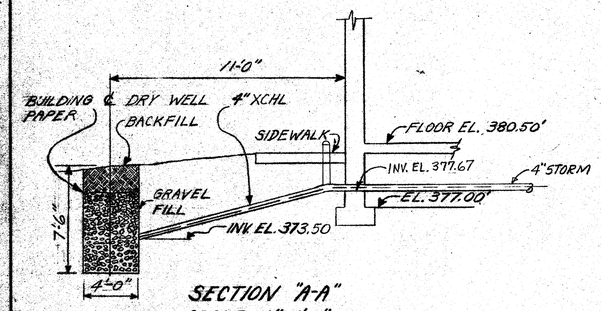

SECTION "A-A"
SCALE: 1/4" = 1'-0"

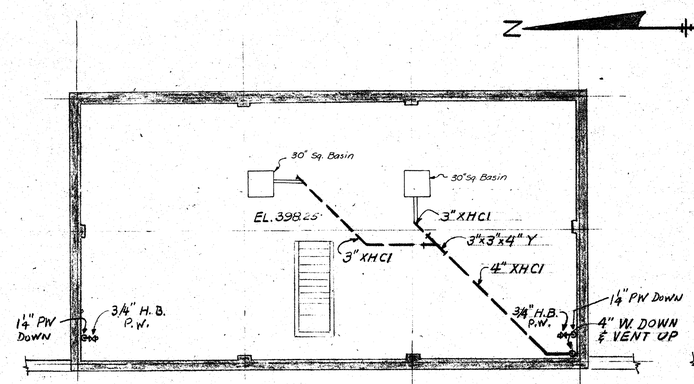

CHEMICAL BLDG.
PLAN @ FL. EL. 398.25
SCALE: 1/8" = 1'-0"

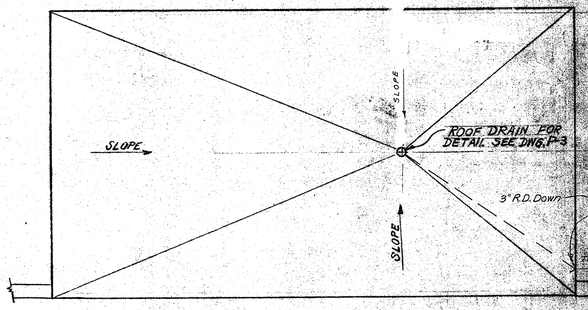

CHEMICAL BLDG.
ROOF DRAIN PLAN
SCALE: 1/8" = 1'-0"

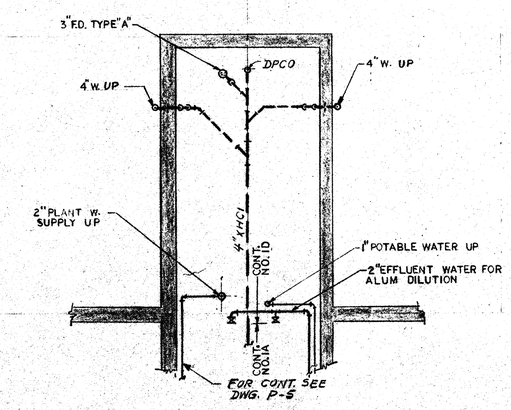

PLAN @ EL. 368.00
SCALE: 1/8" = 1'-0"

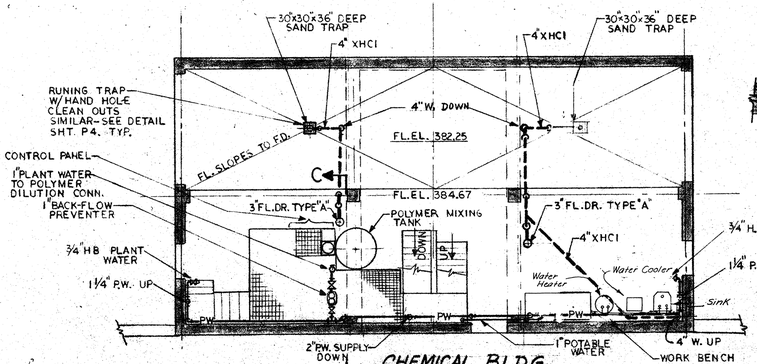

CHEMICAL BLDG.
PLAN @ FL. EL. 384.67
SCALE: 1/8" = 1'-0"

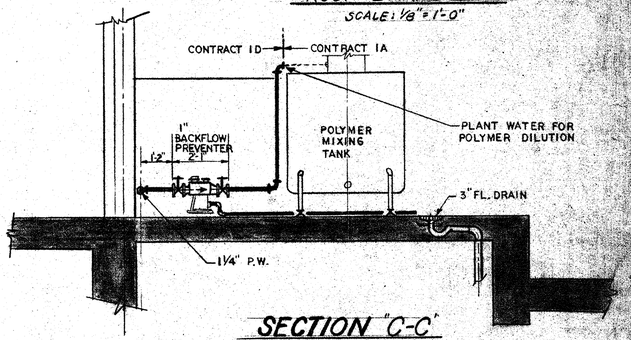

SECTION "C-C"
SCALE: 3/8" = 1'-0"

ONONDAGA COUNTY DEPARTMENT OF PUBLIC WORKS
DIVISION OF DRAINAGE AND SANITATION
BREWERTON WATER POLLUTION CONTROL PLANT

CONTROL & CHEMICAL BUILDING
PLUMBING DETAILS

TOWN OF CICERO — ONONDAGA CO., N.Y.

BARTON, BROWN, CLYDE & LOGUIDICE
CONSULTING ENGINEERS & LAND SURVEYORS
NORTH SYRACUSE, NEW YORK

DATE: FEBRUARY 1975
SCALE: AS SHOWN
FILE NO.: 55.32-132F

P-7

REVISIONS

IN CHARGE OF: F.A.L.
DESIGNED BY: D.C.M.
DRAWN BY: V.R.
CHECKED BY:

INSTRUMENT SCHEDULE

SERVICE	ITEM NO.	QUAN	DESCRIPTION	LOCATION	DWG	REMARKS
WATER SUPPLY FLOW	FQ-601-1	1	WATER METER	CONT BLDG.	P-4	
WATER SUPPLY PRESSURE	PI-608-1	1	PRESSURE GAUGE	CONTROL BUILDING	P-4	0-100 psig
EFFLUENT WATER SUPPLY PUMP SUCTION - PRESSURE	PI-609-1	1	PRESSURE GAUGE	RAW SEWAGE PUMPING STATION	P-3	0-60 psig
EFFLUENT WATER SUPPLY PUMP DISCHARGE - PRESSURE	PI-610-1,2,3	3	PRESSURE GAUGE	RAW SEWAGE PUMPING STATION	P-3	0-100 psig
EFFLUENT WATER TO HYDRO-PNEUMATIC TANK - FLOW CONTROL	FCV-611-1	1	FLOW CONTROL VALVE	RAW SEWAGE PUMPING STATION	P-3	
EFFLUENT WATER SUPPLY PRESSURE CONTROL	PC-612-1	1	PUMP CONTROLLER	RAW SEWAGE PUMPING STATION	P-3	
EFFLUENT WATER SYSTEM PRESSURE	PI-613-1	1	PRESSURE GAUGE	RAW SEWAGE PUMPING STATION	P-3	0-100 psig
EFFLUENT WATER SUPPLY SYSTEM - AIR PRESSURE	PI-614-1	1	PRESSURE GAUGE	RAW SEWAGE PUMPING STATION	P-3	0-100 psig
EFFLUENT & PLANT WATER SYSTEM INTERCONNECTION - PRESSURE CONTROL	PRV-615-1	1	PRESSURE REGULATOR VALVE	CONTROL BUILDING	P-4	VALVE OPENS FOR PLANT WATER IF EFF. WATER PRESSURE DROPS
EFFLUENT & PLANT WATER SYSTEM INTERCONNECTION - PRESSURE	PI-616-1	1	PRESSURE GAUGE	CONTROL BUILDING	P-4	0-100 psig
EFFLUENT WATER SUPPLY SYSTEM - AIR PRESSURE	SV-618-1	1	TWO-WAY SOLENOID VALVE	RAW SEWAGE PUMPING STATION	P-3	ENERGIZE TO OPEN

EFFLUENT WATER SUPPLY SYSTEM
SEE HEALY RUFF WIRING DIAGRAM

IN CHARGE OF: F.A.L.
DESIGNED BY: D.C.M.
DRAWN BY: E.N.P.
CHECKED BY: F.A.L.

REVISIONS

ONONDAGA COUNTY DEPARTMENT OF PUBLIC WORKS
DIVISION OF DRAINAGE AND SANITATION
BREWERTON WATER POLLUTION CONTROL PLANT
PUMPING CONTROL DIAGRAM
PLUMBING
TOWN OF CICERO ONONDAGA CO., N.Y.

BARTON, BROWN, CLYDE & LOGUIDICE
CONSULTING ENGINEERS & LAND SURVEYORS
NORTH SYRACUSE, NEW YORK

DATE: FEBRUARY 1975
SCALE: NONE
FILE NO.: 55.32-135

P-9